NG1000 Weather Radio Transmitter System

Troubleshooting Manual

Document: NG1000-TROUBLESHOOT

Issue: 0.3 2010-06-11

Status: Preliminary

nautel

Nautel Limited
10089 Peggy's Cove Road
Hackett's Cove, NS Canada B3Z 3J4
Phone: +1.902.823.3900 or
Toll Free: +1.877.6NAUTEL (6628835) (Canada & USA only)
Fax: +1.902.823.3183

Nautel Inc.
201 Target Industrial Circle
Bangor, Maine USA 04401
Phone: +1.207.947.8200
Fax: +1.207.947.3693

Customer Service (24 hour support)
+1.877.628.8353 (Canada & USA only)
+1.902.823.5100 (International)

Email: support@nautel.com
Web: www.nautel.com

The comparisons and other information provided in this document have been prepared in good faith based on publicly available information. The reader is encouraged to consult the respective manufacturer's most recent published data for verification.

© Copyright 2010 NAUTEL. All rights reserved.

Contents

Release control record vii

About this manual ix

About safety xiii

Safety precautions xv

Responding to alarms 1-1

Corrective maintenance 1-1
Electrostatic protection 1-3
Identifying an alarm 1-4
Power Supply Module Replacement 1-15
+48 V Power Supply Replacement 1-16
Cooling fan replacement 1-17
Exciter/Control PWB Replacement 1-18
PS Distribution PWB Replacement 1-19
LED PWB Replacement 1-20
System Controller PWB Replacement 1-21
Button/LED PWB Replacement 1-22
Front Panel Display Replacement 1-23
RF Coaxial Switch Replacement 1-24
Modem Replacement 1-25
Audio Surge Protector Replacement 1-25
Data Line Surge Protector Replacement 1-26
ROAMS Unit Replacement 1-27
Dummy Load Replacement 1-27
Ac surge protector MOV Replacement 1-28

Parts Lists 2-1
Parts information 2-1
Family tree 2-1
How to locate information about a specific part 2-1
Column content 2-2
OEM code to manufacturer's cross-reference 2-3
Common abbreviations/acronyms 2-4

Wiring/connector lists 3-1
Wiring lists provided 3-1
Wiring lists not provided 3-1
Connector mating information 3-1
Wire colours 3-1
Printed wiring board patterns 3-1

Reading Electrical Schematics 4-1
Component values 4-1
Graphic symbols 4-1
Logic symbols 4-1
Reference designations 4-1
Unique symbols 4-2
Identifying schematic diagrams 4-2
Structure of schematics 4-2
Locating schematic diagram(s) for a functional block 4-3
Locating a part or assembly on a schematic 4-3

Mechanical Drawings 5-1
Identifying mechanical drawings 5-1
Content of mechanical drawings 5-1

List of terms 6-1

Release control record

Issue	Date	Reason
0.1	2010-02-01	Initial release of manual
0.2	2010-05-19	Incorporated Engineering review comments
0.3	2010-06-11	Incorporated Engineering review comments

About this manual

This manual provides troubleshooting information for the NG1000 transmitter. It is intended for use by field technicians. This manual allows the troubleshooting technician to diagnose a fault to the system level, using alarm response procedures, parts lists, wiring lists, and electrical schematics. Electrical schematics and mechanical drawings are included at the end of the manual.

Performing procedures

When using procedures in this manual, perform each step in sequence.

- If you are asked to **see** another section of this manual, or another document, refer to that section or document for additional information, then continue the procedure.
- If you are asked to **go** to another step within the procedure, jump directly to that step without performing the intervening steps.
- If you are asked to **go** to another section or document, stop the procedure and perform the tasks described in the other section or document.
- If you are asked to **check a voltage**, use a digital voltmeter and test the voltage relative to ground (unless otherwise instructed).
- If you are asked to **check a signal**, use an oscilloscope and test the signal relative to ground (unless otherwise instructed).

Technical support

Nautel offers technical support to customers over the Internet and by telephone. Nautel's customer support team will answer your questions and work with you to identify and resolve problems.

For 24-hour technical support, call toll free at 1.877.628.8353 (in USA and Canada only) or call 1.902.823.5100 (international) or find us on the Internet at http://www.nautel.com.

For parts and tools information, see "Parts and tools" on page 9-1 of the *NG1000 Pre-Installation Manual*.

For extended warranty information, see "Pre-installation assistance" on page 9-1 of the *NG1000 Pre-Installation Manual*.

NG1000 transmitter manuals

The NG1000 documentation suite includes the following documents:

NG1000 Pre-installation Manual, NG1000-PREINST. Provides instructions and reference information needed when planning and preparing for the installation of an NG1000 transmitter.

Nautel Site Protection Manual. Provides detailed information about protecting your site from lightning-related hazards.

NG1000 Installation Manual, NG1000-INST. Provides instructions and reference information needed when installing an NG1000 transmitter.

NG1000 Operating and Maintenance Manual, NG1000-OPS-MAINT. Provides instructions for operating, maintaining and troubleshooting an NG1000 transmitter. It also provides reference information needed when performing diagnostic procedures.

NG1000 Troubleshooting Manual, NG1000-TROUBLE. Provides detailed technical information about the NG1000 transmitter, including electrical schematics and mechanical drawings.

Nautel website / Online resources

The Nautel website provides useful resources to keep you up to date on your NG1000.

Nautel User Group (NUG)

The website includes a special section that customers can log into in order to access the Nautel customer newsletter, product manuals, frequently asked questions (FAQ), information sheets, and information about field upgrades.

Documentation: online and printed

The website's NUG section provides online access to all the documentation for your NG1000. Documentation is provided in Acrobat (PDF) format. You can use the documentation online or print the sections that you need.

When using online documents:

- Click on blue text (hyperlinks) to jump to a related section, or to get additional information (e.g., view a term's definition).
- To search a document to find keywords, use Find in Acrobat Reader's Edit menu.

- To quickly find a specific section, click the section in the PDF file's **Bookmarks** list.

When using printed documents:

- To find keywords, go to the *Index* section at the end of the manual.
- To find a specific term, go to the *List of Terms* section near the end of the manual.

About safety

All Nautel transmitters are designed to meet the requirements of *EN60215, Safety Requirements for Radio Transmitters*.

The philosophy of *EN60215* is that the removal of any cover or panel that can only be opened using a tool is a maintenance activity, and that any person performing a maintenance activity is expected to be trained for that activity. Under *EN60215*, it is assumed that trained personnel will be knowledgeable and will take precautions such as removing all power to the transmitter before accessing its components.

Electrical hazards

To remove power from the transmitter, switch off and lock out the ac power. There is an amber LED in each ac distribution assembly at the bottom rear of the cabinet that glows to remind anyone who has not turned off the power that the system is live and serious danger is present.

WARNING: It is not enough to remove RF power. The power line is still connected.

Mount the transmitter ac power disconnect switch/breaker close to the transmitter so that it can be reached quickly in an emergency. Clearly label the disconnect switch/breaker (e.g., EMERGENCY SWITCH).

After turning off the power, always perform a measurement to confirm that the power is off before touching anything within the transmitter. If the wrong breaker was opened, the equipment will be live.

WARNING: Do not use an ordinary multimeter to check for voltage, since it may have been left inadvertently on the AMP (A) range, triggering a short and an arc blast that could result in severe burns and even death.

Use only a non-contact voltage probe or a safety voltmeter (available from vendors such as Fluke, Ideal, and Teagam).

Use a proper lockout procedure to ensure that another worker cannot accidentally reapply power while you are performing maintenance on any part of the transmitter or site.

Lightning hazards

Before opening the transmitter and touching internal parts, remove and solidly ground the antenna connection.

WARNING: It is not enough to ground the antenna terminal with the antenna still connected. Even a small impedance in the ground strap will result in lethal voltages during a lightning strike.

RF hazards

A serious RF hazard and very high voltages exist in the vicinity of the antenna and its networks during normal operations.

Toxic hazards

There are devices used in this equipment containing beryllium oxide ceramic, which is non-hazardous during normal device operation and under normal device failure conditions. These devices are specifically identified with "(BeO)" in the *Description* column of the *Troubleshooting Manual's* parts list(s).

Do not cut, crush or grind devices because the resulting dust may be hazardous if inhaled. Unserviceable devices should be disposed of as harmful waste.

Other hazards

Ensure that appropriate fire alarms and fire extinguishers are available. Extinguishers must be suitable for use on electrical fires.

Many other site safety risks exist. It is beyond the scope of this manual to identify all the risks and procedures.

Safety precautions

This section provides very important information about protecting the safety of personnel and equipment:

- Personal safety - see page xv
- Site safety - see page xvi
- Equipment safety - see page xviii

Personal safety

Training

The training of any personnel who will have physical access to the site or the transmitter is very important. Personnel must be familiar with the transmitter, so that they can avoid physical danger, and be aware of hazards to themselves and the equipment.

Nautel offers a number of training courses covering the basic fundamentals of RF systems and transmitters, and the operation and maintenance of the transmitter. For more information about available courses and schedules, go to the Nautel website at http://www.nautel.com/Training.aspx, or ask your Nautel sales representative.

Site orientation

When you give personnel access to the transmitter site (e.g., hiring new personnel, or giving access keys to personnel), perform a site orientation to ensure that they are familiar with the site, on-site procedures, and on-site hazards. Cover the following topics:

- Securing the site (locking doors and fences) to prevent unauthorized access
- How and when to call for technical support or emergency assistance
- Areas of the site and pieces of equipment that are *off limits*

Voltage awareness

Ensure that all personnel that are able to access areas with high voltage circuits or high field strengths are aware of the hazards associated with high voltage. Cover the following topics:

- High voltage or high field strength areas where caution is required
- Physical risks of electric shock
- Risks for personnel with pacemakers or other medical implants
- Induced voltages in high field strength areas
- On-site risks during thunderstorms and lightning strikes
- Operation of safety interlocks (if installed)

First aid

Nautel does not offer first aid training, since the hazards associated with high voltage and RF energy are not specific to the transmitter. However, the customer should provide first aid training to all personnel who have access to the transmitter site. First aid training should include CPR, care of burns, artificial respiration, and defibrillation if specific equipment is available on-site.

Site safety

Controlling access

Transmitters and antennas generate and carry dangerous voltages that can be harmful or fatal. It is very important that you control access to the site and its equipment. To secure your transmitter site, use:

- Locking steel or security doors to prevent casual access
- A perimeter fence to keep trespassers away from the antenna system and feedline
- “No Trespassing” signs
- An alarm system

Marking hazards

Place warning signs close to any hazardous areas or systems (e.g., the feedline or the antenna system). Make the signs large enough that they cannot be missed. Provide signage in all languages used in the region. These signs are intended not only for authorized personnel, but also for emergency responders or accidental trespassers.

Qualifying site personnel

Make sure that personnel who have access to the site are qualified to work around electronics and high voltage systems.

Ac power protection

You should take steps to protect equipment from surges (over-voltage spikes) on the ac power lines. Surges may occur during thunderstorms, or because of malfunctions in the electrical distribution grid. Surge suppressors and ac power conditioners can prevent serious damage to your on-site equipment, including the transmitter.

RF protection

Transmitters and their antenna systems create intense radio frequency fields at the transmitter site, particularly near the feedline, antenna and tower. At some sites, these fields may cause biological effects, including the heating of body tissues. Intense fields can also create dangerous high voltages on ungrounded, conductive surfaces and objects. At certain points where high voltage conductors come close to grounded conductors (e.g., at feedline junctions or on the tower), dangerous electrical arcing or flashovers can occur. It is very important that you take the following steps to prevent damage to equipment or personnel due to RF fields:

- Use safety interlocks to de-energize transmitters if personnel open doors or panels accessing high field areas
- Place warning signs in any locations where high fields can occur
- Train personnel about the short-term and long-term hazards of RF radiation
- Physically block access to the area around the antenna system, feedline and tower
- Ground all exposed conductive surfaces or objects in high field areas

The RF connection to the transmitter output can be a serious safety hazard. Connect a 50 Ω test load during installation and commissioning. It is recommended that a switch be used to automatically connect the transmitter to the antenna system without human contact with the transmitting conductors.

Safety interlocks

The transmitter contains an electrical interlock, which is an external circuit that turns off the RF output if any of its switches are opened.

Ac disconnect switch

Safe operation of the transmitter requires an ac disconnect switch. Lock the ac disconnect switch in the disconnected (open) position during the installation process.

Equipment safety

Electrostatic protection

The transmitter's systems are very rugged and resistant to damage. However, it is possible for damage to occur because of high voltage electrostatic discharges during servicing. Train all service personnel to ground themselves to bleed off any static charge before opening the transmitter or touching any exposed components. Provide a grounding wand or known ground (e.g., a grounded metal table) that personnel can use to discharge themselves.

Surge protection

Surge protection is recommended for your entire site. However, even if you do not use a surge protector on the service entrance to the site, you should install a surge protector in the transmitter's ac power feed to prevent over-voltage from entering the transmitter.

Lightning protection

The transmitter is designed to resist lightning strike damage. However, intense or repeated strikes could damage the transmitter. We recommend that you install lightning suppression on the antenna, tower and feedline to reduce the effect of lightning strikes on the transmitter itself (and to protect the rest of your site equipment and your personnel). For detailed information about lightning protection, see the *Nautel Site Preparation Manual*, available from your Nautel sales agent, or online from the Nautel website.

Physical protection

Consider physical hazards to equipment at your site, including the transmitter. Ensure that equipment is protected from weather (e.g., rain or flooding), even during extreme weather events. Place equipment so that it is not in the path of swinging doors or high-traffic areas. Do not allow wheeled items like office chairs or tables with wheels in the transmitter room, as these may damage equipment if accidentally pushed or knocked over. Do not place the transmitter under water pipes, drains, or sprinklers. Keep any equipment that generates heat, like the transmitter, away from flammable materials like ceiling panels, cubicle dividers, and curtains.

Earthquake protection

If the transmitter site is in a region that experiences any noticeable earthquake activity, take steps to prevent the transmitter from shifting or rocking during an earthquake. Even during minor earthquakes, rocking or movement of the transmitter is likely to damage the feedline connection, and could even cause a catastrophic failure of the ac power feed into the transmitter. During larger earthquakes, the weight of the transmitter chassis could be hazardous to nearby equipment or personnel.

Four 1/4-inch pilot holes are provided in the bottom corners of the transmitter system cabinet to allow for securing the cabinet to a floor.

Section 1: Responding to alarms

This section provides instructions you need when performing troubleshooting on the NG1000 transmitter. This section includes the following topics:

- Corrective maintenance
- Electrostatic protection - see page 1-3
- Identifying an alarm - see page 1-4

If none of the procedures and alarms described in this section address your problem, contact Nautel for assistance. See "Technical support" on page ix.

Corrective maintenance

Corrective maintenance procedures consist of identifying and correcting defects or deficiencies that arise during transmitter operation. Local and/or remote alarm signals are generated when a malfunction occurs. If an alarm condition is caused by a malfunction in the RF power stage, the transmitter may maintain operation at a reduced RF output level. The nature of the fault – and station policy – will dictate whether an immediate maintenance response is necessary. Fault analysis and rectification may be conducted from three different levels, with a different technical competence level required for each: on-air troubleshooting, remote or local, and off-air troubleshooting.

> CAUTION:
> The transmitter contains many solid state devices that may be damaged if subjected to excessive heat or high voltage transients. Every effort must be taken to ensure that circuits are not overdriven or disconnected from their loads while turned on.

On-air troubleshooting

On-air troubleshooting can be performed from a remote location, or locally at the transmitter site.

Remote troubleshooting

Remote on-air troubleshooting consists of monitoring the transmitter's radiated signal using an on-air monitor, and observing the status of each remote fault alarm indicator. Information obtained from these sources should enable an operator to decide whether an alarm response may be deferred to a more convenient time, an immediate corrective action must be taken, or if a standby transmitter must

be enabled (if one is available). It is recommended that the significance of remote indications, and the appropriate responses, be incorporated into a station's standard operating procedures. Refer to "Identifying an alarm" on page 1-4 to determine the remedial action required for a given fault.

Local troubleshooting

Local on-air troubleshooting consists of monitoring the transmitter's integral meters and fault alarm indicators. Analysis of this data will normally identify the type of fault, and in most cases will determine what corrective action must be taken. Refer to "Identifying an alarm" on page 1-4 to determine the remedial action required for a given fault.

Off-air troubleshooting

Off-air troubleshooting must be performed when the replacement of a defective assembly/module, or routine on-air calibration adjustments, will not restore operation.

It is recommended that the associated transmitter's output be routed to the 50 Ω resistive dummy load provided before starting off-air troubleshooting procedures.

Electrostatic protection

The transmitter's assemblies contain semiconductor devices that are susceptible to damage from electrostatic discharge. The following precautions must be observed when handling an assembly which contains these devices.

CAUTION:
Electrostatic energy is produced when two insulating materials are rubbed together. A person wearing rubber-soled shoes, walking across a nylon carpet or a waxed floor, can generate an extremely large electrostatic charge. This effect is magnified during periods of low humidity. Semiconductor devices such as integrated circuits, field-effect transistors, thyristors and Schottky diodes may be damaged by this high voltage unless adequate precautions are taken.

Electrical discharging of personnel

Personnel should be electrically discharged by a suitable grounding system (e.g., anti-static mats, grounding straps) when removing an assembly from the transmitter, and while handling the assembly for maintenance procedures.

Handling/Storage

An assembly should be placed in an anti-static bag when it is not installed in a host transmitter, or when it is not undergoing maintenance. Electronic components should be stored in anti-static materials.

Tools/Test equipment

Testing and maintenance equipment – including soldering and unsoldering tools – should be suitable (i.e., grounded tip) for contact with static sensitive semiconductor devices.

Stress current protection

Every precaution should be taken to ensure the static sensitive semiconductor devices are protected from unnecessary stress current. This is achieved by ensuring that current is not flowing when an electrical connection is broken, and that voltages are not present on external control/monitoring circuits when they are connected.

Identifying an alarm

The best way to identify an alarm is by viewing the front panel of the system controller (A1), and in some cases the front panel of the VHF transmitters (A2 and A3).

Alarm/status LEDs

The ALARM/STATUS section on the system controller front panel contains four LEDs (see Figure 1.1) that aid in isolating an active fault to a particular section of the transmitter system - TRANSMITTER A, TRANSMITTER B, CONTROLLER and EXTERNAL.

Figure 1.1: Alarm/Status LEDs

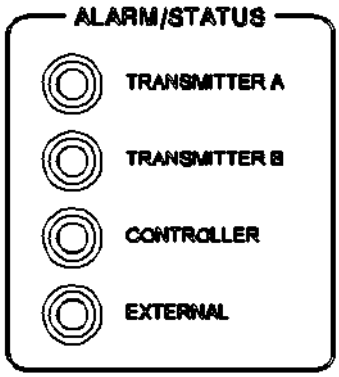

When the TRANSMITTER A or TRANSMITTER B LED is:

- green - transmitter is on, with no known faults.
- blinking green/red - transmitter is RF on, but a fault is present
- red - transmitter is RF off.

When the CONTROLLER or EXTERNAL LED is:

- green - system operation is normal, with no known faults.
- blinking green/red - system is operating with a fault
- red - a fault is present or the system is RF off.

When a fault is present, the transmitter may still produce an RF output or a changeover to the standby transmitter may occur (if enabled). You should schedule and commence more in-depth fault diagnosis. See "List of current alarms" on page 1-6.

VHF transmitter status LEDs

The front panel of each VHF transmitter contains three LEDs that aid in isolating an active fault - TRANSMITTER STATUS, antenna and load (see Figure 1.1). The TRANSMITTER STATUS LED and one of the antenna or load LED will always be on. They indicate the transmitter's operational status as well as its RF routing path. The status of these LEDs should be identical to the TRANSMITTER A or TRANSMITTER B LED on the system controller front panel.

Figure 1.2: Transmitter Status LEDs

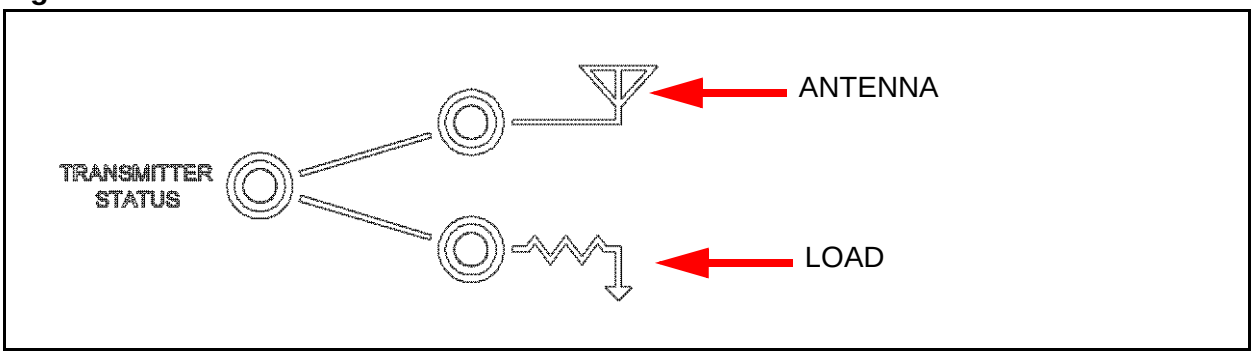

When the TRANSMITTER STATUS and associated antenna or load LEDs are:

- green - transmitter operation in the associated path is normal, with no known faults.
- blinking green/red (TRANSMITTER STATUS LED only) - transmitter is RF on, but a fault is present
- red - RF off

When a fault is present, the associated transmitter may still produce an RF output or a changeover to the standby transmitter may occur (if enabled). In the case of a changeover, the suspect transmitter may have already been routed to the dummy load (check the dummy load LED status). You should schedule and commence more in-depth fault diagnosis. To further isolate the origin of the fault, see "List of current alarms" on page 1-6.

List of current alarms

If an alarm exists and is currently being recognized by the transmitter system, it is displayed in the Alarms screen of the front panel Display (see Figure 1.3). The prefix of the alarm name indicates the sub-system origin of the alarm. For example, alarm names prefixed with "TXA" or "TXB" are part of transmitter A or B, respectively. Alarm names with "Sys Con" or no prefix are system alarms.

Figure 1.3: Alarms Screen

```
Alarms:          1-3/4
>Coax Switch Fault
 Coax Interlock Open
▼TXA Comm Fail
```

Table 1.1 on page 1-7 contains a column for most Alarms that can occur, sorted alphanumerically by system controlller generated faults and transmitter generated faults. The Description and Troubleshooting Action column provides a brief description of the alarm, troubleshooting tips and a cross-reference to more detailed troubleshooting, if applicable.

1. Scroll through the Alarms screen to view the active faults.

2. Enter the alarm name in Table 1.1 on page 1-7 to determine the cause of the alarm and perform any recommended troubleshooting procedures.

> *NOTE:*
> *Before undertaking any troubleshooting, record all Display meter readings and note if any other alarms are displayed on the* Alarms *page. Record all alarms.*

3. If troubleshooting and subsequent replacement of a suspect PWB or module causes the alarm to disappear from the Alarms screen, the alarm has been succesfully cleared.

4. If troubleshooting and subsequent replacement of a suspect PWB or module does not remove the fault condition, contact Nautel.

Table 1.1: Troubleshooting Alarms

Alarm (with Prefix)	Description and Troubleshooting Action
System Controller Generated Faults	
AIn1(J11A-11) Fault	This alarm occurs when the analog input applied to the auxiliary analog input 1 (pin 11 on AUX I/O connector A1J11A) is in an alarm sensing condition, based on a threshold defined by the user.
AIn2(J11A-12) Fault	This alarm occurs when the analog input applied to the auxiliary analog input 2 (pin 12 on AUX I/O connector A1J11A) is in an alarm sensing condition, based on a threshold defined by the user.
AIn3(J11A-13) Fault	This alarm occurs when the analog input applied to the auxiliary analog input 3 (pin 13 on AUX I/O connector A1J11A) is in an alarm sensing condition, based on a threshold defined by the user.
AIn4(J11A-14) Fault	This alarm occurs when the analog input applied to the auxiliary analog input 4 (pin 14 on AUX I/O connector A1J11A) is in an alarm sensing condition, based on a threshold defined by the user.
Auto Chgover Event	This alarm occurs when an automatic transmitter changeover occurs, typically due to the active transmitter's forward power falling below a preset threshold. Check and troubleshoot the associated transmitter for faults that may have caused the changeover. Reset this alarm using a manual changeover command or alarm reset.
Carrier Fault	This alarm occurs when the carrier frequency is off the desired frequency by a preset amount (typically 12.5 kHz, or half a channel spacing).
Coax Interlock Open	This alarm occurs when the RF coaxial switch's internal interlock circuit is open. The system RF output is inhibited by opening the associated transmitter interlock circuits. If the troubleshooting tips do not clear the alarm, replace the RF coaxial switch (see "RF Coaxial Switch Replacement" on page 1-24).
Coax Switch Fault	This alarm occurs when the RF coaxial switch's position does not agree with the desired switch position command. The system RF output is inhibited by opening the associated transmitter interlock circuits. If the alarm persists, replace the RF coaxial switch (see "RF Coaxial Switch Replacement" on page 1-24).

Alarm (with Prefix)	Description and Troubleshooting Action
DIn1(J11A-1) Fault	This alarm occurs when the digital input applied to the auxiliary digital input 1 (pin 1 on AUX I/O connector A1J11A) is in an alarm sensing condition, defined by the user.
DIn2(J11A-2) Fault	This alarm occurs when the digital input applied to the auxiliary digital input 2 (pin 2 on AUX I/O connector A1J11A) is in an alarm sensing condition, defined by the user.
DIn3(J11A-3) Fault	This alarm occurs when the digital input applied to the auxiliary digital input 3 (pin 3 on AUX I/O connector A1J11A) is in an alarm sensing condition, defined by the user.
DIn4(J11A-4) Fault	This alarm occurs when the digital input applied to the auxiliary digital input 4 (pin 4 on AUX I/O connector A1J11A) is in an alarm sensing condition, defined by the user.
Sys Con Pri (or Sec) AC High	This alarm occurs when the primary or secondary ac source voltage applied to the system controller (A1) is greater than 134 V. Check the ac power sources. If they are OK, suspect a fault with the system controller PWB (A1). To replace a system controller PWB, see "System Controller PWB Replacement" on page 1-21.
Sys Con Pri (or Sec) AC Low	This alarm occurs when the primary or secondary ac source voltage applied to the system controller (A1) is less than 92 V. Check the ac power sources. If they are OK, suspect a fault with the system controller PWB (A1). To replace a system controller PWB, see "System Controller PWB Replacement" on page 1-21.
Sys Con +5V Fault	This alarm occurs when the system controller's +5 V power supply's output voltage is outside the acceptable range (between 4.7 and 5.3 V. Suspect a possible fault with the +5 V supply circuitry on the system controller PWB (A1). To replace a system controller PWB, see "System Controller PWB Replacement" on page 1-21.
Sys Con +12V Fault	This alarm occurs when the system controller's +12 V power supply's output voltage is outside the acceptable range (between 11.2 and 12.8 V). Suspect a possible fault with the +12 V supply circuitry on the system controller PWB (A1). To replace a system controller PWB, see "System Controller PWB Replacement" on page 1-21.
System Fwd Pwr Low	This alarm occurs when the system's RF output power falls below the preset low power tone threshold (configurable betweeen 25 and 75%). Check the active transmitter for associated faults.

Alarm (with Prefix)	Description and Troubleshooting Action
System High VSWR	This alarm occurs when the VSWR at the system's RF output exceeds 5.5:1. The transmitter system is inhibited.
Sys Interlock Open	This alarm occurs when the external interlock circuit for the overall system is not closed, inhibiting the transmitter's output. Check the interlock connection between J1-1 and J1-2 on the system controller PWB. If the interlock is intact, check all external interlock switches. Otherwise, suspect a problem with the interlock circuitry on the system controller PWB.
System Reset	This alarm occurs when a system reset is in progress.
Transmitter Generated Faults	
TXA (or TXB) AC Fault	This alarm occurs when an associated transmitter's power supply module (U3 or U4) detects a PS Ac Fail, caused when the input ac voltage is less than 180 V ac or above 264 V ac. These fault signals are passed to the system controller on dedicated lines. Check the ac power source. If it is OK, suspect a fault with the power supply module (U3 or U4). To replace a power supply module, see "Power Supply Module Replacement" on page 1-15.
TXA (or TXB) All PAs Failed	This alarm occurs when all PAs in the transmitter are indicating PA Fail alarms.
TXA (or TXB) Audio Shutdown	This alarm occurs during a firmware upgrade. It indicates that the associated transmitter is not processing audio because it is undergoing a firmware upgrade.
TXA (or TXB) Coax Interlock	This alarm occurs when the coax interlock input from the system controller is not in the correct state, inhibiting the associated transmitter's output.
TXA (or TXB) Comm Fail	This alarm occurs when the associated transmitter is not responding on the serial bus, indicating lack of power, a faulty cable or a hardware fault. Check the serial cables between the system controller and the associated transmitter.
TXA (or TXB) Cutback	This alarm occurs when the associated transmitter has reduction in RF output power, caused by the occurrence of multiple shutback events within a pre-defined time period.

Alarm (with Prefix)	Description and Troubleshooting Action
TXA (or TXB) Disch PA Volts	This alarm occurs when the associated transmitter is taking longer than expected to discharge the voltage from the power supply after turning off (maximum acceptable time is 2 s).
TXA (or TXB) Exc Rebooted	This alarm occurs when the associated transmitter's exciter reboots. Typically this alarm accompanies a loss of ac power to the transmitter.
TXA (or TXB) Ext Interlock	This alarm occurs when the external interlock circuit for the associated transmitter is not closed, inhibiting the transmitter's output. Check the interlock connection between J4-1 and J4-2 on the exciter/control PWB. If the interlock is intact, check all external interlock switches. Otherwise, suspect a problem with the interlock circuitry on the exciter/control PWB.
TXA (or TXB) External Mute	This alarm occurs when the external mute input from the system controller is asserted, inhibiting the associated transmitter's output.
TXA (or TXB) Fan 1 - 5 Fail	This alarm occurs when the associated cooling fan's tachometer reading is less than 3000 RPM. Typical fan speed is between 6400 and 7000 RPM.
TXA (or TXB) Firmware Upgrd	This alarm occurs when an exciter firmware upgrade is in progress. The associate transmitter cannot produce RF.
TXA (or TXB) Insuff Fans On	This alarm occurs when two or more cooling fans fail, which results in insufficient cooling. The associated transmitter's output is inhibited.
TXA (or TXB) Intake Over Temp	This alarm occurs when the temperature of the intake air for the associated transmitter exceeds the design limit for safe operation (55°C or 131°F). The associated transmitter's RF output will be inhibited until the intake air cools to a temperature that is within design specifications.
TXA (or TXB) IPA Bias Fail	This alarm occurs when the associated transmitter's IPA is unable to reach the desired bias current (450 mA) for a gate bias voltage range between 2 V and 3 V during a bias routine.
TXA (or TXB) IPA Output High	This alarm occurs when the associated transmitter's IPA output power is greater than 130% of the set point level (set point = 150 W; alarm threshold = 195 W. The alarm clears when the IPA output power decreases to a level that is less than 110% of the set point.

Alarm (with Prefix)	Description and Troubleshooting Action
TXA (or TXB) IPA Output Low	This alarm occurs when the associated transmitter's IPA output power is less than 40% of the set point level (set point = 150 W; alarm threshold = 60 W. The alarm clears when the IPA output power increases to a level that is greater than 90% of the set point.
TXA (or TXB) Main Audio Low	This alarm occurs when the main audio input level is less than the threshold level specified for VOX keying (configurable between -50 dBm and -25 dBm). If enabled, this alarm will mute the associated transmitter's output.
TXA (or TXB) No Int 10 MHz	This alarm occurs when the TCXO on the exciter/control PWB is significantly off frequency or missing. The associated transmitter's RF output will be inhibited.
TXA (or TXB) PA Over Temp	This alarm occurs when the heatsink temperature exceeds the safe limit for the PAs (100°C or 212°F). The associated transmitter's RF output will be inhibited until the alarm condition clears.
TXA (or TXB) PA Power Limit	This alarm occurs when the transmitter has limited the PA forward power to an acceptable level, based on VSWR, PA failures or PA dissipation limits.
TXA (or TXB) PA Volts A or B Fail	This alarm occurs when the associated PA voltage supply has fallen more than 4 V below the expected voltage for the corresponding power supply control voltage.
TXA (or TXB) PA 1 - 8 Fail	This alarm occurs when the associated transmitter's corresponding PA has been flagged with a failure condition, due to a low current reading that is less than half of the average of the operational PAs (minimum threshold is 500 mA).
TXA (or TXB) PLL Unlock	This alarm occurs when the exciter/control PWB's main PLL is unlocked, inhibiting the associated transmitter's RF output due to the possibility of being off frequency.
TXA (or TXB) Preamp Bias Flt	This alarm occurs when the associated transmitter's preamp is unable to reach the desired bias current (35 mA) for a gate bias voltage range between 2 V and 3 V during a bias routine.

Alarm (with Prefix)	Description and Troubleshooting Action
TXA (or TXB) Preamp/IPA Fail	This alarm occurs when the associated transmitter's IPA has been flagged with a failure condition, due to a current reading that is less than 50% of nominal or greater than 150% of nominal. The nominal IPA current reading is 3.79 A (alarm occurs below 1.90 A or above 5.68 A). Preamp current is not monitored to determine a failure condition.
TXA (or TXB) PS A or B AC Fail	This alarm occurs when an associated transmitter's power supply module (U3 or U4) detects a PS AC Fail, caused when the input ac voltage is less than 180 V ac or above 264 V ac. These fault signals are passed to the system controller on a serial bus. Check the ac power source. If it is OK, suspect a fault with the power supply module (U3 or U4). To replace a power supply module, see "Power Supply Module Replacement" on page 1-15.
TXA (or TXB) PS A or B Missing	This alarm occurs when the associated power supply is not present.
TXA (or TXB) PS A or B Over Temp	This alarm occurs when the associated power supply's internal temperature protection circuit trips, causing it to be inhibited.
TXA (or TXB) PS Dist 15V Flt	This alarm occurs when the +15 V power supply's output voltage is outside the acceptable range. Suspect a possible fault with the +15 V supply circuitry on the PS distribution PWB (A2).
TXA (or TXB) PS Dist 5V Fail	This alarm occurs when the +5 V power supply's output voltage is outside the acceptable range. Suspect a possible fault with the +5 V supply circuitry on the PS distribution PWB (A2).
TXA (or TXB) Reject Foldback	This alarm occurs when the output power is being limited due to excessive reject power.
TXA (or TXB) Resid PA Volts	This alarm occurs when the output power is being inhibited due to residual voltage on the power supply (minimum acceptable level is 3 V). This must be allowed to discharge before turning on again.
TXA (or TXB) RF Off	This alarm occurs when the associated transmitter issues a command to turn itself off.
TXA (or TXB) Running Bias	This alarm occurs when the associated transmitter is running its biasing routine, during which time it cannot produce RF power.
TXA (or TXB) SAME TXF Inhib	This alarm occurs when the associated transmitter is being inhibited due to receiving a TXF command via the SAME interface.

Alarm (with Prefix)	Description and Troubleshooting Action
TXA (or TXB) SWR Foldback	This alarm occurs when the transmitter system output probe measures a reflected power greater than 309 W, at rated power (or VSWR of 3.5:1). The active transmitter has entered a foldback mode to maintain the reflected power at 309 W or less. The transmitter will continue to fold back, as necessary, to maintain this reflected power, until the system VSWR reaches 5.5:1, at which point the system will shut down and generate a System High VSWR alarm.
TXA (or TXB) SWR Shutback	This alarm occurs when the associated transmitter measures a high VSWR condition on its output, causing a complete, but temporary loss of RF output power.
TXA (or TXB) SWR Shutdown	This alarm occurs when the associated transmitter shuts down with a complete loss of RF output power due to repeated cutback, foldback or shutback events. The system requires a manual reset to recover.
TXA (or TXB) 48V Fail	This alarm occurs when the +48 V power supply's output voltage is outside the acceptable range of 43.2 V to 52.8 V. Suspect a possible fault with the +48 V power supply (U2).
TXA (or TXB) +15V Fail	This alarm occurs when the +15 V power supply measured on the exciter/control PWB is outside the acceptable range of 13.5 V to 16.5 V. Suspect a possible fault with the +15 V supply circuitry on the exciter/control PWB (A1).
TXA (or TXB) -15V Fail	This alarm occurs when the -15 V power supply's output voltage is outside the acceptable range of -16.5 V to -13.5 V. Suspect a possible fault with the -15 V supply circuitry on the exciter/control PWB (A1).
TXA (or TXB) +5V Fail	This alarm occurs when the +5 V power supply measured on the exciter/control PWB is outside the acceptable range. Suspect a possible fault on the exciter/control PWB (A1).
TXA (or TXB) +3.3V Fail	This alarm occurs when the +3.3 V power supply's output voltage is outside the acceptable range of 3.0 V to 3.6 V. Suspect a possible fault with the +3.3 V supply circuitry on the exciter/control PWB (A1).
TXA (or TXB) +1.8V Fail	This alarm occurs when the +1.8 V power supply's output voltage is outside the acceptable range of 1.6 V to 2.0 V. Suspect a possible fault with the +1.8 V supply circuitry on the exciter/control PWB (A1).

Table 1.2: Module Replacement

Module	Location	Replacement Procedure
Power Supply Module	VHF Transmitter A and B	See page 1-15
+48 V Power Supply	VHF Transmitter A and B	See page 1-16
Cooling Fans	VHF Transmitter A and B	See page 1-17
Exciter/Control PWB	VHF Transmitter A and B	See page 1-18
PS Distribution PWB	VHF Transmitter A and B	See page 1-19
LED PWB	VHF Transmitter A and B	See page 1-20
System Controller PWB	System Controller	See page 1-21
Button/LED PWB	System Controller	See page 1-22
Front Panel Display	System Controller	See page 1-23
RF Coaxial Switch	System Cabinet	See page 1-24
Modem	System Cabinet	See page 1-25
Audio Surge Protector	System Cabinet	See page 1-25
Data Line Surge Protector	System Cabinet	See page 1-26
ROAMS Unit	System Cabinet	See page 1-27
Dummy Load	Side of System Cabinet	See page 1-27
Ac Surge Protector MOV	External to System	See page 1-28

Power Supply Module Replacement

WARNING:
Lethal voltages exist inside the system cabinet when power is on. Follow replacement instructions carefully to ensure safety for maintenance personnel during power supply replacement.

See Figure MD-5 (top view) in the Mechanical Drawings section (Section 6) of this manual.

1. Disconnect the associated VHF transmitter's (A or B) ac power source, disconnect all cabling from the rear of the transmitter and remove it from the system cabinet.

2. Place the VHF transmitter - top side up - on a suitable work surface. Remove the transmitter's top cover, noting it is secured using M3 screws.

3. Remove the securing bracket from the front of the power supply module (U3 or U4) by removing two M3 screws. Retain hardware.

4. Slide the power supply module toward the front of the VHF transmitter to disengage it from its mating connector.

5. Remove the power supply module from the transmitter.

6. Locate or obtain a replacement power supply module (Nautel Part # UG69A). Reverse Step 1 through Step 5 to reinstall the new power supply module. The transmitter should resume normal operation and the alarm should clear.

+48 V Power Supply Replacement

WARNING:
Lethal voltages exist inside the system cabinet when power is on. Follow replacement instructions carefully to ensure safety for maintenance personnel during power supply replacement.

See Figure MD-5 (top view) in the Mechanical Drawings section (Section 6) of this manual.

1. Disconnect the associated VHF transmitter's (A or B) ac power source, disconnect all cabling from the rear of the transmitter and remove it from the system cabinet.

2. Place the VHF transmitter - top side up - on a suitable work surface. Remove the transmitter's bottom cover, noting it is secured using M3 screws.

3. Remove the four M4 screws that secure the +48 V power supply (U2) (and its mounting brackets) to the transmitter. Retain hardware.

4. Disconnect wires # 7 through 12 from the +48 V power supply's terminal block, noting their destinations.

5. Remove the +48 V power supply from the VHF transmitter and remove its brackets for use with the new power supply.

6. Locate or obtain a replacement power supply module (Nautel Part # UG78). Install the brackets on the new power supply and reverse Step 1 through Step 5 to reinstall the new +48 V power supply. If necessary, refer to Table 3.7, "Wiring List - NARF62 VHF Transmitter, 1250 W" on page 3- 6 for wiring details for U2. The transmitter should resume normal operation and the alarm should clear.

Cooling fan replacement

See Figure MD-5 (bottom view) in the Mechanical Drawings section (Section 6) of this manual.

1. Disconnect the associated VHF transmitter's (A or B) ac power source, disconnect all cabling from the rear of the transmitter and remove it from the system cabinet.

2. Place the VHF transmitter - bottom side up - on a suitable work surface. Remove the transmitter's bottom cover, noting it is secured using M3 screws.

3. Disconnect all fan mating plugs (B1P1 through B5P1) from the splitter PWB (A4).

4. Slide the cooling fan assembly up and out of the transmitter chassis.

5. Remove the defective fan(s), noting they are secured using M3 screws. Retain hardware.

6. Obtain a replacement fan (Nautel Part # 216-8011) from the site spares kit, if purchased, or contact Nautel to obtain a replacement fan.

7. Install the replacement fan using retained screws.

8. Re-install the cooling fan assembly in the transmitter chassis.

9. Reconnect the fan mating plugs to the splitter PWB.

10. Re-install the VHF transmitter's bottom cover and return the transmitter to the system cabinet.

Exciter/Control PWB Replacement

See Figure MD-5 (top view) in the Mechanical Drawings section (Section 6) of this manual.

> *NOTE:*
> *The exciter/control PWB is static sensitive and must be handled in a static protected manner.*

1. Use the system controller's front panel UI Control menu to record all settings and use the Calibration menu to record the scale factors for all parameters displayed. You will need to re-enter all settings and scale factors after the replacement PWB is installed.

> *NOTE:*
> *If you have the "NG Series Remote Application" program installed on a PC or laptop near the transmitter system, it is recommended you save a calibration (CSV) file for the applicable transmitter before removing the exciter/control PWB. Refer to the NG Series Remote Application information provided in section 2 of the Operations and Maintenance Manual for detailed instructions on downloading system data.*
>
> *If you do not have the "NG Series Remote Application" program - available from Nautel - you will need to manually re-calibrate your audio and sub-audio inputs and run routines to bias the pre-amp/IPA and calibrate the 10 MHz reference. Refer to the Calibration information provided in section 2 of the Operations and Maintenance Manual for detailed instructions on calibrating parameters.*

2. Disconnect the associated VHF transmitter's (A or B) ac power source, disconnect all cabling from the rear of the transmitter and remove it from the system cabinet.

3. Place the VHF transmitter - top side up - on a suitable work surface. Remove the transmitter's top cover, noting it is secured using M3 screws.

4. Disconnect all mating plugs from the exciter/control PWB (A1). Remove the D-sub connector's securing screws using a 5 mm socket (Nautel Part # HAS80, provided in the ancillary kit).

5. Remove the six M3 screws that secure the exciter/control PWB (A1) to the transmitter. Retain hardware.

6. Remove the exciter/control PWB from the VHF transmitter.

7. Locate or obtain a replacement exciter/control PWB (Nautel Part # NAPE82). Reverse Step 1 through Step 6 to reinstall the new exciter/control PWB. If necessary, refer to Table 3.7 on page 3-6 for connector mating details for A1.

8. Restore all **Control** menu settings and **Calibration** menu scale factors that were recorded in Step 1.

9. Refer to the Calibration procedures in the *"Operating the Transmitter"* section of the *Operations and Maintenance Manual* and perform the appropriate transmitter's audio input, sub-audible input, 10 MHz calibration procedures as well its preamp/IPA bias routine. The transmitter should resume normal operation and any associated alarms should clear.

PS Distribution PWB Replacement

> *NOTE:*
> *The PS distribution PWB is static sensitive and must be handled in a static protected manner.*

See Figure **MD-5** (top view) in the Mechanical Drawings section (Section 6) of this manual.

1. Disconnect the associated VHF transmitter's (A or B) ac power source, disconnect all cabling from the rear of the transmitter and remove it from the system cabinet.

2. Place the VHF transmitter - top side up - on a suitable work surface. Remove the transmitter's top cover, noting it is secured using M3 screws.

3. Remove the power supply modules (U3 and U4) from the transmitter.

4. Disconnect all mating plugs from the PS distribution PWB (A2). Remove the four wires (# 10, 12, 13 and 14) connected to terminal block TB1.

5. Remove the five M3 nuts, split and flat washers that secure the PS distribution PWB to the transmitter. Retain hardware.

6. Remove the PS distribution PWB from the VHF transmitter.

7. Locate or obtain a replacement PS distribution PWB (Nautel Part # NAPI24). Reverse Step 1 through Step 6 to reinstall the new PS distribution PWB. If necessary, refer to Table 3.8 on page 3-7 for connector mating details for A2. The transmitter should resume normal operation and any associated alarms should clear.

LED PWB Replacement

See Figure MD-5 (right side view) in the Mechanical Drawings section (Section 6) of this manual.

1. Disconnect the associated VHF transmitter's (A or B) ac power source, disconnect all cabling from the rear of the transmitter and remove it from the system cabinet.

2. Place the VHF transmitter - top side up - on a suitable work surface. Remove the transmitter's top cover, noting it is secured using M3 screws.

3. Remove the power supply modules (U3 and U4) from the transmitter.

4. Disconnect ribbon cable connector W4P2 from the LED PWB (A7).

5. Remove the four M3 screws that secure the LED PWB to the transmitter's front panel. Retain hardware.

6. Remove the LED PWB from the VHF transmitter.

7. Locate or obtain a replacement LED PWB (Nautel Part # NAPX40). Reverse Step 1 through Step 6 to reinstall the new LED PWB. The transmitter should resume normal operation and any associated alarms should clear.

System Controller PWB Replacement

See Figures MD-1 and MD-2 in the Mechanical Drawings section (Section 6) of this manual.

> *NOTE:*
> *The system controller PWB is static sensitive and must be handled in a static protected manner.*

1. Use the system controller's front panel UI Control menu to record all settings and use the Calibration menu to record the scale factors for all parameters displayed. You will need to re-enter all settings and scale factors after the replacement PWB is installed.

> *NOTE:*
> *If you have the "NG Series Remote Application" program installed on a PC or laptop near the transmitter system, it is recommended you save a calibration (CSV) file for the system before removing the system controller PWB. Refer to the NG Series Remote Application information provided in section 2 of the Operations and Maintenance Manual for detailed instructions on downloading system data.*

2. Turn off the transmitter system and disconnect (or disable) its ac power sources.

3. Open the system cabinet's rear door and locate the system controller (A1).

4. Disconnect all cabing from the rear of the system controller. Remove the system controller from the system cabinet, noting it is secured using four front panel screws.

5. Place the system controller - top side up - on a suitable work surface. Remove the system controller's top cover, noting it is secured using M3 screws.

6. Disconnect all mating plugs from the system controller PWB (A1A1). Remove the D-sub connector's securing screws using a 5 mm socket (Nautel Part # HAS80, provided in the ancillary kit).

7. Remove the seven M3 screws that secure the system controller PWB to the system controller. Retain hardware.

8. Remove the system controller PWB from the system controller, noting some of its connectors protrude through the rear panel.

9. Locate or obtain a replacement system controller PWB (Nautel Part # NAPC157). Reverse Step 2 through Step 8 to reinstall the new system controller PWB. If necessary, refer to Table 3.4 on page 3-3 for connector mating details for A1A1

10. Restore all **Control** menu settings and **Calibration** menu scale factors that were recorded in Step 1. The transmitter should resume normal operation and any associated alarms should clear.

Button/LED PWB Replacement

See Figures **MD-1** and **MD-2** in the Mechanical Drawings section (Section 6) of this manual.

1. Turn off the transmitter system and disconnect (or disable) its ac power sources.

2. Open the system cabinet's rear door and locate the system controller (A1).

3. Disconnect all cabing from the rear of the system controller. Remove the system controller from the system cabinet, noting it is secured using four front panel screws.

4. Place the system controller - top side up - on a suitable work surface. Remove the system controller's top cover, noting it is secured using M3 screws.

5. Disconnect ribbon cable connector W1P2 from the button/LED PWB (A1A2).

6. Remove the six M3 screws that secure the button/LED PWB to the system controller's front panel. Retain hardware.

7. Remove the button/LED PWB from the system controller, noting many of its parts protrude through the front panel.

8. Locate or obtain a replacement button/LED PWB (Nautel Part # NAPX39). Reverse Step 1 through Step 7 to reinstall the new button/LED PWB. The transmitter should resume normal operation and any associated alarms should clear.

Front Panel Display Replacement

See Figures MD-1 and MD-2 in the Mechanical Drawings section (Section 6) of this manual.

1. Turn off the transmitter system and disconnect (or disable) its ac power sources.

2. Open the system cabinet's rear door and locate the system controller (A1).

3. Disconnect all cabing from the rear of the system controller. Remove the system controller from the system cabinet, noting it is secured using four front panel screws.

4. Place the system controller - top side up - on a suitable work surface. Remove the system controller's top cover, noting it is secured using M3 screws.

5. Disconnect ribbon cable connector W2P2 from the board mounted behind the front panel display (A1U3).

6. Remove the four M3 screws that secure the front panel display assembly (also referred to as VFD) to the system controller's front panel. Retain hardware.

7. Remove the front panel display assembly from the system controller.

8. Locate or obtain a replacement front panel display (Nautel Part # UW118). Reverse Step 1 through Step 7 to reinstall the new front panel display. The transmitter should resume normal operation and any associated alarms should clear.

RF Coaxial Switch Replacement

See Figure MD-1 in the Mechanical Drawings section (Section 6) of this manual.

1. Turn off the transmitter system and disconnect (or disable) its ac power sources.

2. Open the system cabinet's rear door and locate the RF coaxial switch (U1) mounted near the top of the cabinet.

3. Disconnect four coaxial cables (W5P2, W6P2, W7P1 and W8P1) and 9-pin D-sub connector W3P2 from the RF coaxial switch.

4. Remove the switch bracket, noting it is secured using M4 hardware. Retain hardware to install the new switch on this bracket.

5. Locate or obtain a replacement RF coaxial switch (Nautel Part # KC78). Reverse Step 1 through Step 4 to reinstall the new RF coaxial switch. If necessary, refer to Table 3.4 on page 3-3 for connection details. The transmitter system should resume normal operation and any associated alarm should clear.

Modem Replacement

See Figure MD-1 in the Mechanical Drawings section (Section 6) of this manual.

1. Open the system cabinet's rear door and locate the modem (U5) mounted on a tray near the top of the cabinet.

2. Disconnect cables P8 and W4P2, and the telephone cable from the modem.

3. Remove the modem from the system cabinet, noting it is secured using two M4 screws. Retain hardware to install the new modem.

4. Locate or obtain a replacement modem (Nautel Part # UW66). Reverse Step 1 through Step 3 to reinstall the new modem. If necessary, refer to Table 3.4 on page 3-3 for connection details.

Audio Surge Protector Replacement

See Figure MD-1 in the Mechanical Drawings section (Section 6) of this manual.

1. Open the system cabinet's rear door and locate the audio surge protector (U4) mounted on a tray near the top of the cabinet.

2. Unscrew the wiring on each side of the audio surge protector.

3. Remove the audio surge protector from the system cabinet, noting it is secured using four M4 screws. Retain hardware to install the new audio surge protector.

4. Locate or obtain a replacement audio surge protector (Nautel Part # UE60). Reverse Step 1 through Step 3 to reinstall the new audio surge protector. If necessary, refer to Table 3.4 on page 3-3 for connection details.

Data Line Surge Protector Replacement

See Figure MD-1 in the Mechanical Drawings section (Section 6) of this manual.

1. Open the system cabinet's rear door and locate the data line surge protector (U8) mounted on a tray near the top of the cabinet.

2. Loosen the customer access screw and open U8's access cover.

3. Remove the customer supplied telephone connections (red and green wires) that are secured on the R and G terminals (removes protective rubber warning cover to access terminals).

4. Loosen U8's DO NOT REMOVE COVER screw to allow access to the Nautel installed wiring inside U8. Remove the red and green wire pairs (#s 116 and 117) from U8TB1-1 and U8TB1-2. Remove the green/yellow wire (# 118) from U8-G.

5. Remove the data line surge protector from the system cabinet, noting it is secured using two M4 screws. Retain hardware to install the new data line surge protector.

6. Locate or obtain a replacement data line surge protector (Nautel Part # UE62). Reverse Step 1 through Step 5 to reinstall the new data line surge protector, noting proper routing of wiring. If necessary, refer to Table 3.4 on page 3-3 for connection details.

ROAMS Unit Replacement

See Figure MD-1 in the Mechanical Drawings section (Section 6) of this manual.

1. Open the system cabinet's rear door and locate the ROAMS unit (U6) mounted below the system controller (A1).

2. Disconnect the power connector (U7P2) and the I/O connector (P6) from the back of the ROAMS unit.

3. Remove the three screws above the ROAMS unit that secure the ROAMS mounting bracket to the system cabinet. Retain this hardware for re-installation.

4. Remove the mounting bracket from the ROAMS unit, noting it will be required to mount the new ROAMS unit.

5. Locate or obtain a replacement ROAMS unit (Nautel Part # UX134). Remove its front panel to allow installation of the mounting bracket. Reverse Step 1 through Step 4 to reinstall the new ROAMS unit.

Dummy Load Replacement

See Figure MD-1 in the Mechanical Drawings section (Section 6) of this manual.

1. Turn off the standby transmitter or open its interlock circuit by removing the wiring from the INTERLOCK connector (A1J4) on the rear of the standby transmitter.

2. Disconnect the coaxial cable connected to J1 of the dummy load (U3).

3. Remove the dummy load from its support bracket, noting it is secured using using M8 hardware. Retain hardware to install the new dummy load on this bracket.

4. Locate or obtain a replacement dummy load (Nautel Part # DA98). Reverse Step 1 through Step 3 to reinstall the new dummy load. The transmitter system should resume normal operation and any associated alarm should clear.

Ac surge protector MOV Replacement

This procedure describes how to replace a defective MOV surge suppressor in the ac surge protector (Nautel Part # UE61).

1. Turn off the transmitter system and disconnect (disable or lock out) its ac power source at the service entrance.

2. Open the ac surge protector panel and locate the defective MOV (see Figure 1.4).

3. Remove the defective MOV, noting it is secured using two M8 nuts. Use a 1/2-inch (13 mm) nut driver to remove these nuts. Retain hardware.

4. Locate or obtain a replacement MOV (available from Nautel; Part # UM97). Reverse Step 1 through Step 3 to reinstall the new MOV. When securing M8 nuts, note the maximum allowable torque is 50 in-lbs (5 N-m). The transmitter system should resume normal operation.

Figure 1.4: Ac Surge Protector Panel - MOV Location

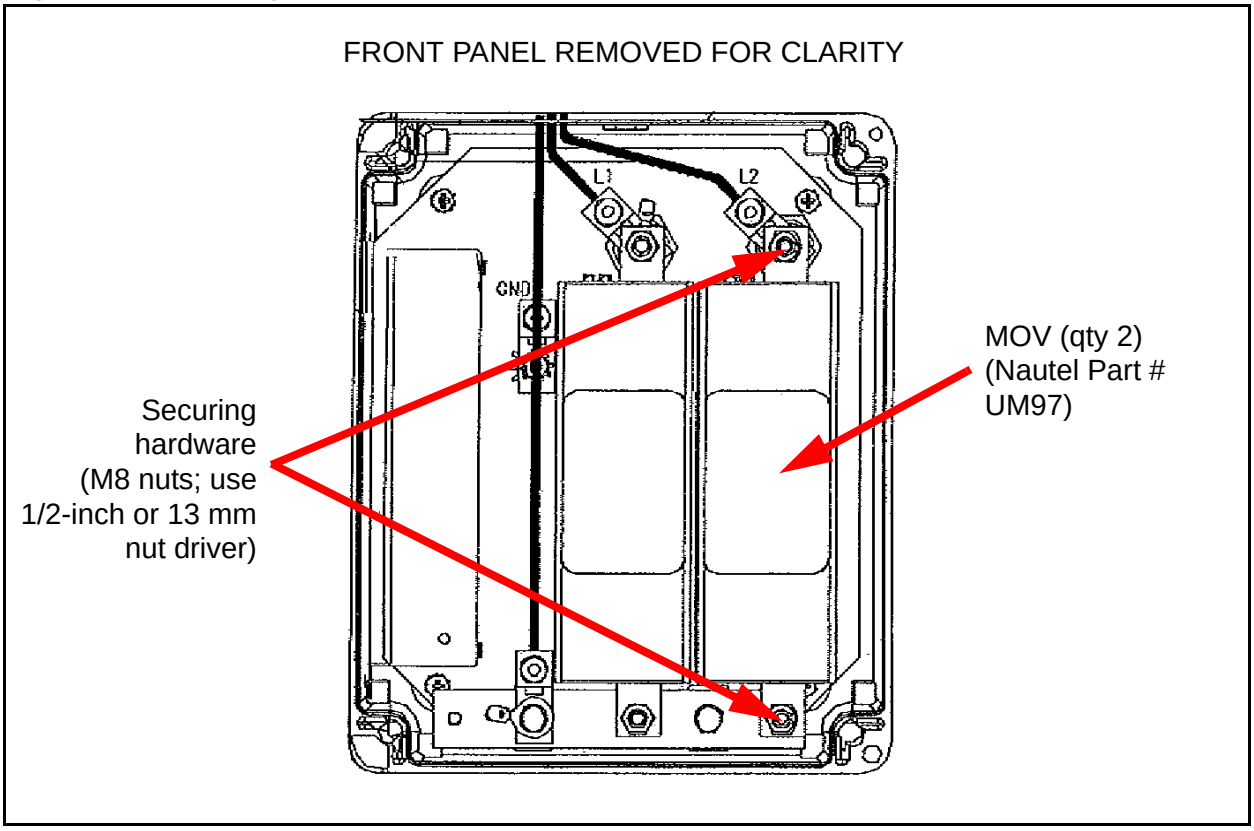

Section 2: Parts Lists

Parts information

This section contains reference designation lists that provide descriptive and provisioning information for all electrical and mechanical parts that have an assigned reference designation and form a part of the subject equipment.

Family tree

Figures 2.1 and 3.2 depict the family trees for the subject equipment. They are based on the descending order of the reference designation hierarchy and identifies all assemblies that have an assigned Nautel configuration control number.

How to locate information about a specific part

To locate the information for a specific part, the assigned reference designation for the part must be known. In addition, the Nautel nomenclature (e.g., NAPA24) assigned to the assembly containing the part or the full reference designation, including the reference designation of all higher assemblies, must be known.

When the nautel nomenclature is known:

- Refer to the appropriate family tree (Figure 2.1 or 2.2) and identify the block(s) associated with the Nautel nomenclature. At the bottom of the main family tree block, a reference is made to “See Part Number Index Tables”. Locate the part's reference designation in the identified reference designation list in this section, noting they are sorted alphanumerically.

When the reference designation is known:

- Refer to the family tree depicted in Figure 2.1 or 2.2 with the full reference designation.
- Follow the family tree branches to the block that represents the lowest level assembly assigned a Nautel configuration control number. Then locate the part number index table for that Nautel configuration control number.
- Locate the part's reference designation in the specified table.

Reference designation lists

Individual reference designation lists are provided for:

- assemblies that are assigned an alpha-prefixed Nautel nomenclature (e.g., NAPA24)
- cable harnesses that are assigned a numbered Nautel part (e.g., 216-8104)
- optional kits that are assigned a numbered Nautel part

To obtain the full reference designation for a specific part the Nautel configuration control number must be located in the appropriate family tree (Figure 2.1 or 2.2) to include the reference designation of all higher level assemblies. The reference designation lists, which are titled and presented in alphanumeric order, are divided into columns to aid in locating specific information.

Column content

The following paragraphs provide an explanation of the purpose and contents of each column in the part number indexes.

Ref des column

The 'ref des' column contains the reference designation for a specific part. These designations are assigned in accordance with the requirements of American National Standard Specification ANSI Y32.16.

Description column

This column contains the name and descriptive information for each part. The key word is presented first, followed by the adjective identifiers. When the description is 'See Family Tree for Assembly Nomenclature', the associated part is subject to its own part index table or is contained in an optional kit's list. Look up the reference designation list title (nomenclature) and the reference designation of the associated part in the family tree (Figure 2.1) to determine where to locate its part information.

Nautel # column

This column contains the Nautel number assigned to each part. This number is Nautel's drawing number for Nautel manufactured parts, Nautel's configuration control number for assemblies that are under configuration control management, or Nautel's inventory management number for purchased parts. When a Nautel configuration control number (e.g. NAPA*) is referenced in this column, the associated ref des item is subject to its own part index table.

Vendor # column

This column contains an original equipment manufacturer's part number for a part. A single part number is listed for each part, even though there may be more than one known manufacturer. The listed number is Nautel's usual or preferred choice. The use of this number does not restrict Nautel from selecting and using commercial equivalents during manufacture, where their use will not degrade circuit operation or reliability.

OEM code column

This column typically contains a five digit coded group as the original equipment manufacturer's (OEM) identifier. The code was extracted from Cataloging Handbook H4/H8 Commercial and Government Entity (Cage) Code. Manufacturers that were not listed in the catalog when this listing was compiled have been assigned a unique five-letter code. This code is assigned arbitrarily and has no other significance. The manufacturers identified for parts that have JAN or MIL part numbers are Nautel's normal supply source for that part.

Note: OEM code 37338 is listed for parts manufactured by Nautel or to a Nautel control drawing. United States of America customers should refer all replacement part orders to Nautel Maine Incorporated (OEM code 57655).

OEM code to manufacturer's cross-reference

The OEM (CAGE) codes listed in the reference designation lists are representative of the original equipment manufacturers of those parts. To determine a specific part's manufacturer contact information, enter the five-character OEM (CAGE) code for that part in the following website:

https://www.bpn.gov/bincs/begin_search.asp

After entering the OEM (CAGE) code number, manufacturer pertinent information (address, telephone number, fax number, etc.) will be displayed. Please contact Nautel if a part cannot be obtained (see also "On-Line Part Quotes" in the Warranty section of this manual).

Manufacturer's index

For customers without web access, Table 2.1 provides a cross-reference from the original equipment manufacturer's (OEM) codes to the manufacturer's name. The listing is sorted alphanumerically by the OEM code.

Common abbreviations/acronyms

The following abbreviations/acronyms may appear in the *Description of Part* column:

- SMT
  Denotes item is designed to be installed using Surface Mount Technology.
- MTA
  Denotes item is a Mass Termination Assembly connector.
- SIP
  Single In-line Package
- DIP
  Dual In-line Package
- IDC
  Denotes item is an Insulation Displacement connector for ribbon cable.

Table 2.1: OEM Codes / Manufacturers

OEM Code	Manufacturer	OEM Code	Manufacturer
00779	CTS Company Incorporated	0DY74	Microsemi Corp-Power Products Grp
01295	Texas Instruments Incorporated	0FMA6	Neutrik USA Inc
01961	Pulse Engineering Inc.	0G343	Huffman Manufacturing Co.
02660	Amphenol Corp., Spectra-Strip/ITD	0GP12	Radiall Inc.
03LB0	Sandisk Corporation	0P2J5	Kingston Technology Company Inc.
04713	Motorola Incorporated	12060	Diodes Inc.
06090	Raychem Corporation	13919	Burr-Brown Corp.
07263	Fairchild Semiconductor Corp	14655	Cornell Dubilier Electronics
07933	Fairchild Semiconductor Corp	15542	Scientific Components Corp.
07EN1	Advanced Monolythic Ceramics	1AA44	Collmer Semiconductor Inc
08779	Signal Transformer Co. Inc.	1E4C5	SEI Electronics Inc.
09482	Amp of Canada Limited	1FN41	Atmel Corporation
09581	3M Canada Incorporated	1JRT7	Epson Electronics American Inc.
0A5K5	IXYS Corporation	1KK13	ITT Industries Incorporated
0AG18	Hirose Electric / USA / Inc.	1MQ07	ZRG Incorporated
0B0A9	Dallas Semiconductor Corporation	1N3T0	Semikron Inc.
0CVK3	Allegro Microsystems Inc.	1W344	United Chemi-Con Mfg Inc.

Table 2.1: OEM Codes / Manufacturers

OEM Code	Manufacturer	OEM Code	Manufacturer
22421	Thomas and Betts Limited	79942	Intel Corp Sales Office
23598	Ross Engineering Corp.	7D893	Fairchild Semiconductor Corporation
23875	M-Tron Industries Incorporated	80294	Bourns Instrument Incorporated
24355	Analog Devices Incorporated	83330	Dialight Corporation, DBA Dialight
27014	National Semiconductor Corporation	90201	Hammond Mfg. Co. Ltd.
27264	Molex Incorporated	91833	Keystone Electronics Corporation
2D829	Cornell Dubilier Electronics Corp.	91929	Honeywell Incorporated
31433	Kemet Electronics Corporation	95146	Alco Electronic Products Inc.
31781	Edac Incorporated	96095	AVX Ceramics, Div of AVX Corp
33062	Ferronics Incorporated	AMP/TYCO	Tyco Electronics Corporation
35005	Dale Electronics	ANALOG D	Analog Devices
37338	Nautel Limited	ASTEC	Astec Power
3CYG3	Sanyo Denki America Inc.	AVAGO	Avago Technologies
3DX59	Citizen America Corporation	AVX CORP	AVX Corporation
3EH09	Murata Electronics North America Inc	C3057	Conec Elektronische Bauelemente
3USB5	Startech.com USA LLP	C4751	Epcos AG
3WCG0	Ferraz Shawmut Incorporated	C & D	C & D Technologies
45496	Digital Systems	COMET	
48862	GC Electronics	Comp Corp	Components Corporation
49588	S B E Incorporated	CORNELL	See 2D829
4G927	Raychem Corporation	CREE INC	Cree Inc.
4TKQ5	UPE Inc.	ER737	Texas Instruments
54473	Matsushita Electric Corp of America	HYPERTR	Hypertronics Corporation
54583	TDK Electronics Corp.	IDT	Integrated Device Technology, Inc.
56289	Sprague Electric Company	ITT INDUS	See 1KK13
56699	BC Components	KEYSTONE	See 91833
56845	Vishay Dale Electronics Inc.	KYCON	Kycon Cable & Connector Inc.
59124	KOA Speer Electronics Inc.	LINEAR	See 64155
59993	International Rectifier Corp.	LITEON	Vishay-Liteon Power Semiconductor
5Y407	Phoenix Contact Inc.	L3845	Circuit-Test Electronics Ltd.
63590	Premier Industrial Corp.	MARKTEC	Marktech Optoelectronics
64155	Linear Technology Corporation	MICRON	Micron Technology, Inc.
65786	Cypress Semiconductor Corp.	MINI-CIRC	Mini-Circuits
71400	Cooper Bussman Inc.	MOLEX	Molex Inc.
71468	ITT Corporation	NATIONAL	See 27014
75042	TRW Incorporated	NXP SEMI	NXP Semiconductors
75915	Littelfuse World Headquarters	ON-SEMI	ON Semiconductor

Table 2.1: OEM Codes / Manufacturers

OEM Code	Manufacturer	OEM Code	Manufacturer
PANAS	Panasonic	SL575	Meanwell Sales Information
PHOENIX	See 5Y407	TDK	See 54583
SARONIX	Saronix	TEXAS	See ER737
SAW84	IEI Technology Corp.	U3040	ST Microelectronics
SB ELE	SB Electronics Incorporated	VENKEL	Venkel Ltd
SCT30	Fairchild	WANJIA	Wanjia

Figure 2.1: Family Tree - NG1000 Transmitter System

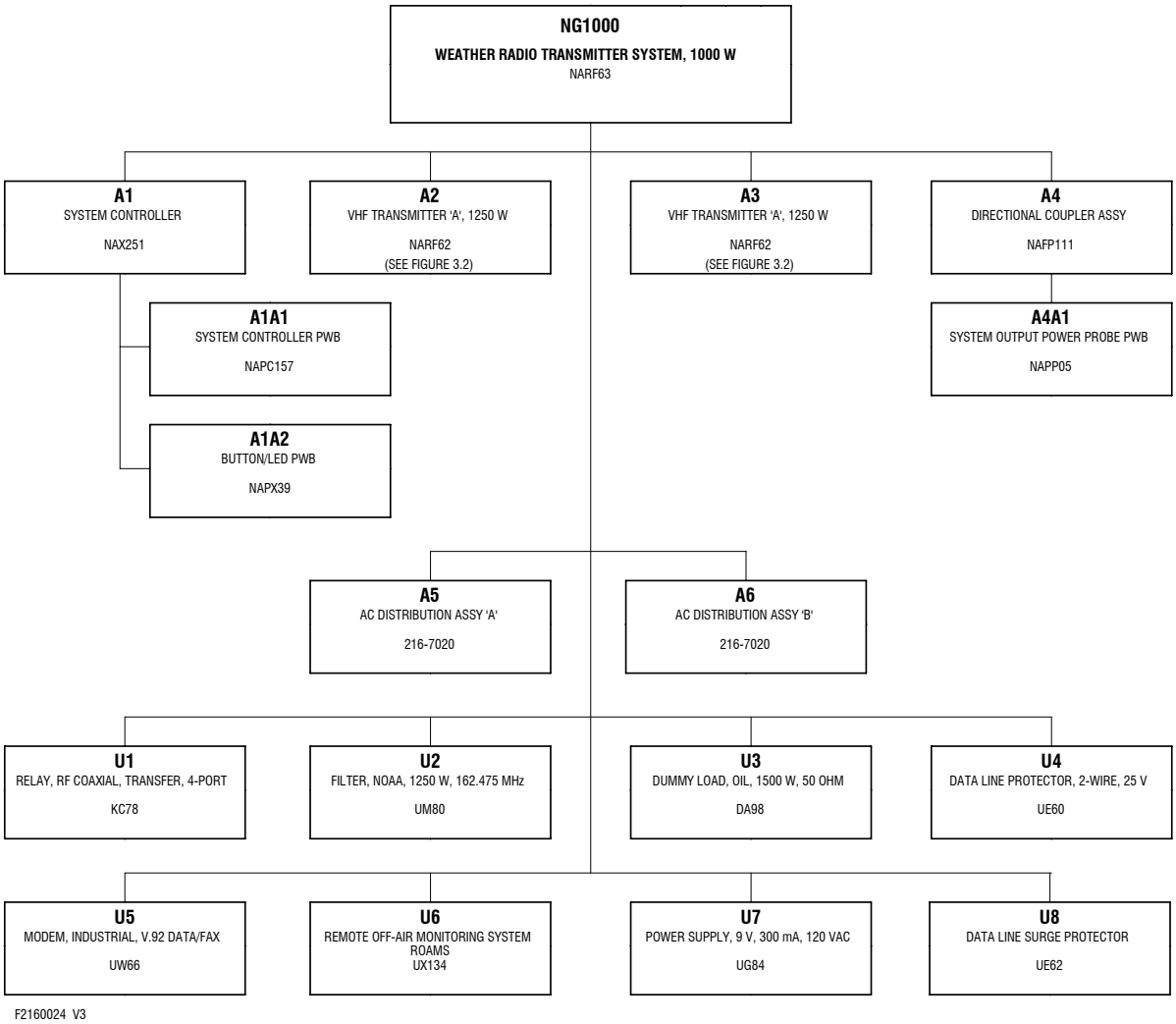

Figure 2.2: Family Tree - 1250 W Transmitter

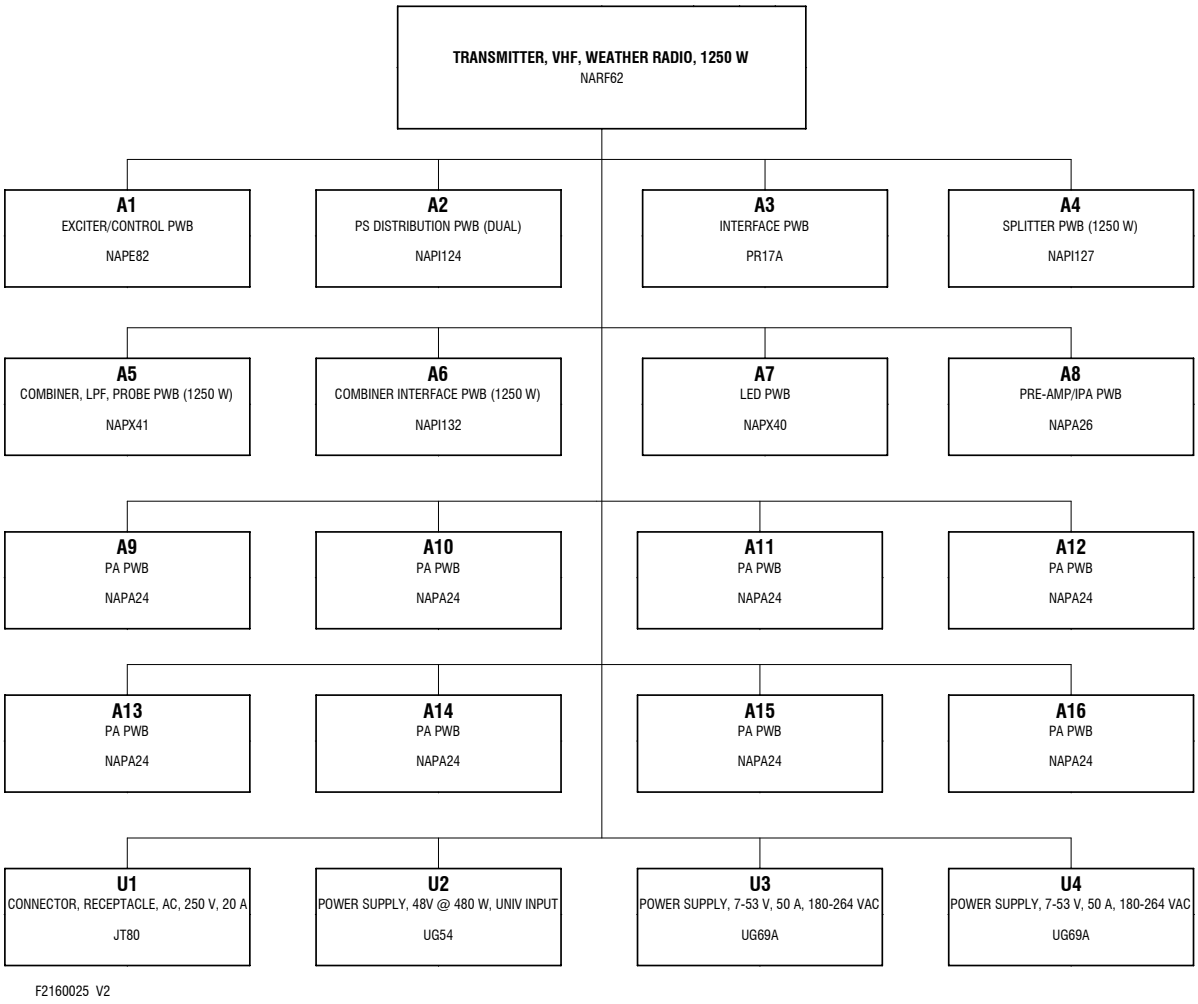

216-5004 Cableform Assy - NAX251

REFDES	DESCRIPTION	NAUTEL #	VENDOR #	OEM CODE
P01	Conn,Quick-Dis,F,1/4 Tab 14-16Shrink	HAM69	B-106-3632	06090
P02	Conn,Quick-Dis,F,1/4 Tab 14-16Shrink	HAM69	B-106-3632	06090
W1P1	Conn, Recept, Ribbon Cable, 40 pin	JP51	746288-9	00779
W1P2	Conn, Recept, Ribbon Cable, 40 pin	JP51	746288-9	00779
W2P1	Conn, Recept, Ribbon Cable, 16 pin	JP87	1658621-3(RoHS)	00779
W2P2	Conn, Recept, Ribbon Cable, 16 pin	JP87	1658621-3(RoHS)	00779

216-5008 Transformer Assy - NOAA

REFDES	DESCRIPTION	NAUTEL #	VENDOR #	OEM CODE
P01	MTA, Standard Dust Cover, 4 pin	JU02	640551-4	09482
P01	MTA, Keyed Closed End Housing,4 pin,22AWG	JU27	3-644463-4(ROHS) AMP	00779
P02	Connector, Quick-Dis, F,1/4 Tab	HAM05	2-520184-2	09482
P03	Connector, Quick-Dis, F,1/4 Tab	HAM05	2-520184-2	09482

216-5120 10MHz Cal Cable Set Assy

REFDES	DESCRIPTION	NAUTEL #	VENDOR #	OEM CODE
P01	Conn, Coax, BNC, Plug,50ohm,Crmp,RG58/303	JF33	31-4320	02660
P02	Conn, Coax, BNC, Plug,50ohm,Crmp,RG58/303	JF33	31-4320	02660

216-7020 AC Distribution Assy (NG1000)

REFDES	DESCRIPTION	NAUTEL #	VENDOR #	OEM CODE
DS01	LED, Pilot Light, Amber, 230Vac	BAP44	LEDTECA220AC	
J01	Receptacle, 250VAC, 15A, Single, NEMA 6-15R	JDP53	HBL5679C	36074
J02	Conn, Recept, AC, Single, Snap, 15A/125V	JT06	88010641	5F520
J03	Conn, Recept, AC, Single, Snap, 15A/125V	JT06	88010641	5F520
J04	Conn, Recept, AC, Single, Snap, 15A/125V	JT06	88010641	5F520
J05	Conn, Recept, AC, Single, Snap, 15A/125V	JT06	88010641	5F520
TB01	Terminal Block, 4-Pos, Double, 61A	JF27	G10/4	5Y407

216-8011 NOAA Fan Assy

REFDES	DESCRIPTION	NAUTEL #	VENDOR #	OEM CODE
L01	Ferrite, Clip-On, NiZn, 320ohms @ 100 MHz	LA52	28A2025-0A2	

REFDES	DESCRIPTION	NAUTEL #	VENDOR #	OEM CODE
J02	Conn, Coax, BNC, Recept,Bulkhead, RG188	JT60	31-318	02660
L01	Toroid, Ferrite, 12.7mm, K Mtl	LA02	11-262-K	33062
L02	Toroid, Ferrite, 12.7mm, K Mtl	LA02	11-262-K	33062
L03	Toroid, Ferrite, 12.7mm, K Mtl	LA02	11-262-K	33062
L04	Toroid, Ferrite, 12.7mm, K Mtl	LA02	11-262-K	33062
L05	Toroid, Ferrite, 12.7mm, K Mtl	LA02	11-262-K	33062
L06	Toroid, Ferrite, 12.7mm, K Mtl	LA02	11-262-K	33062
L07	Toroid, Ferrite, 12.7mm, K Mtl	LA02	11-262-K	33062
L08	Toroid, Ferrite, 12.7mm, K Mtl	LA02	11-262-K	33062
L09	Toroid, Ferrite, 12.7mm, K Mtl	LA02	11-262-K	33062
L10	Ferrite, Clip-On, NiZn, 320ohms @ 100 MHz	LA52	28A2025-0A2	
L11	Ferrite, Clip-On, NiZn, 320ohms @ 100 MHz	LA52	28A2025-0A2	
L12	Ferrite, Clip-On, NiZn, 320ohms @ 100 MHz	LA52	28A2025-0A2	
L13	Ferrite, Clip-On, NiZn, 320ohms @ 100 MHz	LA52	28A2025-0A2	
L14	Ferrite, Clip-On, NiZn, 320ohms @ 100 MHz	LA52	28A2025-0A2	
L15	Ferrite, Clip-On, NiZn, 320ohms @ 100 MHz	LA52	28A2025-0A2	
L16	Ferrite, Clip-On, NiZn, 320ohms @ 100 MHz	LA52	28A2025-0A2	
L17	Ferrite, Clip-On, NiZn, 320ohms @ 100 MHz	LA52	28A2025-0A2	
L18	Ferrite, Clip-On, NiZn, 320ohms @ 100 MHz	LA52	28A2025-0A2	
P01	Conn,Quick-Dis,F,1/4 Tab 14-16Shrink	HAM69	B-106-3632	06090
P02	Conn,Quick-Dis,F,1/4 Tab 14-16Shrink	HAM69	B-106-3632	06090
P03	Conn,Quick-Dis,F,1/4 Tab 14-16Shrink	HAM69	B-106-3632	06090
P04	Conn,Quick-Dis,F,1/4 Tab 14-16Shrink	HAM69	B-106-3632	06090
P05	Connector, Quick-Dis, F,1/4 TAB, 12-10	HS60	4-520448-2	09482
P06	Connector, Quick-Dis, F,1/4 TAB, 12-10	HS60	4-520448-2	09482
P07	Connector, Quick-Dis, F,1/4 TAB, 12-10	HS60	4-520448-2	09482
P08	Connector, Quick-Dis, F,1/4 TAB, 12-10	HS60	4-520448-2	09482
P09	Conn,Quick-Dis,F,1/4 Tab 14-16Shrink	HAM69	B-106-3632	06090
P10	Conn,Quick-Dis,F,1/4 Tab 14-16Shrink	HAM69	B-106-3632	06090
P11	Conn,Quick-Dis,F,1/4 Tab 14-16Shrink	HAM69	B-106-3632	06090
P12	Conn,Quick-Dis,F,1/4 Tab 14-16Shrink	HAM69	B-106-3632	06090
P13	Conn, Coax, BNC, Plug, 50ohm,Crimp	JDP24	225395-7	09482
P14	Not Used	-	NOT USED	37338
W1P1	Conn, Recept, Ribbon Cable, 20 pin	JP45	746288-4	00779
W1P2	Conn, Recept, Ribbon Cable, 20 pin	JP45	746288-4	00779
W2P1	Conn, Recept, Ribbon Cable, 20 pin	JP45	746288-4	00779
W2P2	Conn, Recept, Ribbon Cable, 20 pin	JP45	746288-4	00779
W3P1	Conn, Recept, Ribbon Cable, 40 pin	JP51	746288-9	00779
W3P2	Conn, Edge Card to Ribbon Cbl,40pin, Dual Row, 30u Gold, M3	JN65	3464-0001	

Continued from previous page

216-8104 Cableform Assy-1250W VHF XMTR

REFDES	DESCRIPTION	NAUTEL #	VENDOR #	OEM CODE
W4P1	Conn, Recept, Ribbon Cable, 10 pin	JP50	746285-1	00779
W4P2	Conn, Recept, Ribbon Cable, 10 pin	JP50	746285-1	00779

216-8354 Cable Set Assy NG1000

REFDES	DESCRIPTION	NAUTEL #	VENDOR #	OEM CODE
P01	Conn, Plug, 3-pos, Screw Clamp	JR58	SH03-5.00	
P02	Conn, Plug, 3-pos, Screw Clamp	JR58	SH03-5.00	
P03	Conn, Plug, 3-pos, Screw Clamp	JR58	SH03-5.00	
P04	Conn, Plug, 3-pos, Screw Clamp	JR58	SH03-5.00	
P05	Conn, Contact, Socket, HDP-20Strip	JQ18	66504-4	09482
P05	Conn, Socket, D-Sub, 15 pin	JR29	205205-1	09482
P05	Conn, Lock Screw, D-Sub, Male	JT16	205980-1	09482
P06	Plug, 12-pos, Screw, Clamp	JR61	SH12-5.00	
P07	Plug, Mini, 2-pole,Screw Clamp	JU32	AKZ1550/2	0DV12
P09	Plug, Mini, 2-pole,Screw Clamp	JU32	AKZ1550/2	0DV12
P10	Plug, Mini, 2-pole,Screw Clamp	JU32	AKZ1550/2	0DV12
P11	Conn, Plug, 3-pos, Screw Clamp	JR58	SH03-5.00	
P12	Conn, Plug, 3-pos, Screw Clamp	JR58	SH03-5.00	
P13	Conn, Plug, 3-pos, Screw Clamp	JR58	SH03-5.00	
P14	Conn, Plug, 3-pos, Screw Clamp	JR58	SH03-5.00	
P15	Conn, Plug, 3-pos, Screw Clamp	JR58	SH03-5.00	
P16	Plug, RJ-11, Solid, Flat Oval,6-4	HAY67	5-556384-3(RoHS)	AMP
RT01	Thermistor, 200K Ohms @ 25C	RX07	135-204QAG-J01	1BH13
W01	Cable, 3ft, 9-pin D-sub, M/FStraight-Through	UA129	PCM-2100-03	
W02	Cable, 3ft, 9-pin D-sub, M/FStraight-Through	UA129	PCM-2100-03	
W03	Cable, 3ft, 9-pin D-sub, M/FStraight-Through	UA129	PCM-2100-03	
W05	Cable, Jumper, 1/2" Superflex,7/16 DIN-M-RA to 7/16 DIN-M 1m	UA152	JBB1-S012-SP10 Exir Telecom	
W06	Cable, Jumper, 1/2" Superflex,7/16 DIN-M-RA to 7/16 DIN-M 1m	UA152	JBB1-S012-SP10 Exir Telecom	
W07	Cable 1/2" Superflex, 7/16 DIN plugs, 1m	UA114	JBB0-S012-AB10	
W08	Cable, Jumper, 1/2" Superflex,7/16 DIN-M Connectors 2m	UA153	JBB0-S012-AB20 Exir Telecom	
W09P1	Conn, Coax, SMA, Plug, Crimp, RG58	JT104	132113(RoHS)	07JE4
W09P2	Conn, Coax, BNC, Plug,50ohm,Crmp,RG58/303	JF33	31-4320	02660
W10P1	Conn, Coax, SMA, Plug, Crimp, RG58	JT104	132113(RoHS)	07JE4
W10P2	Conn, Coax, BNC, Plug,50ohm,Crmp,RG58/303	JF33	31-4320	02660
W11	Cord,AC,3-cond,250Vac,15A,8Ft,Nema 6-15 to C19	JN57	86226060(ROHS)	INTERPOW
W12	Cord,AC,3-cond,250Vac,15A,8Ft,Nema 6-15 to C19	JN57	86226060(ROHS)	INTERPOW
W13	Cord, Line Assy, Mates with JN24, 125V	JN25	IPC-65010B-01	BERQUIST
W14	Cord, Line Assy, Mates with JN24, 125V	JN25	IPC-65010B-01	BERQUIST

NAFP111 Directional Coupler Assy -NG1000

REFDES	DESCRIPTION	NAUTEL #	VENDOR #	OEM CODE
A01	System Output Power Probe PWBAssy - NOAA	NAPP05	216-6125	37338
J01	Conn, Coax Recept, Plug, 7/16 DIN, Panel 50ohm	JA96	272132	
J02	Conn, Coax, Recept, 7/16 DIN,Panel,50ohm	JA44	716-24	02660

REFDES	DESCRIPTION	NAUTEL #	VENDOR #	OEM CODE
C01	Capacitor, Ceramic, 1.0uF 100V	CAP16	RPE114Z5U105M100V	91929
C02	Capacitor, Ceramic, 1.0uF 100V	CAP16	RPE114Z5U105M100V	91929
C03	Not Used	-	NOT USED	37338
C04	Capacitor,SMT,Ceramic,0.001uF,50V,10%	CT53	ATC100B102KW50X	29990
C05	Capacitor,SMT,Ceramic,0.001uF,50V,10%	CT53	ATC100B102KW50X	29990
C06	Capacitor, SMT, Porcelain,10pF 500V, 2%	CS86	1111P100GW501X	
C07	Capacitor, SMT, Porcelain,10pF 500V, 2%	CS86	1111P100GW501X	
C08	Capacitor, Metal, Polyester, 10uF 100V	CT38	DME1W10K	14655
C09	Capacitor,SMT,Ceramic,0.1uF,100V,10%	CT51	C1812C104K1RAC	91929
C10	Capacitor,SMT,Ceramic,470pF,200V,10%	CT52	ATC100B471KW200X	29990
C11	Not Used	-	NOT USED	37338
C12	Capacitor, SMT, Ceramic, 1000pF, 5%, 63V	CT20	1206CG102J9BB2	05093
C13	Capacitor, SMT, Ceramic, 1000pF, 5%, 63V	CT20	1206CG102J9BB2	05093
C14	Capacitor, SMT, Porcelain, 240pF, 200V, 2%	CS88	1111P241GW201X	
C15	Capacitor,SMT,Ceramic,0.01uF,100V,10%	CT50	Passive Plus C1206C103K1RAC	91929
C16	Capacitor,SMT,Ceramic,0.01uF,100V,10%	CT50	C1206C103K1RAC	91929
C17	Not Used	-	NOT USED	37338
C18	Not Used	-	NOT USED	37338
C19	Not Used	-	NOT USED	37338
C20	Not Used	-	NOT USED	37338
C21	Not Used	-	NOT USED	37338
C22	Capacitor,SMT,Ceramic,0.01uF,100V,10%	CT50	C1206C103K1RAC	91929
C23	Not Used	-	NOT USED	37338
C24	Capacitor, Ceramic, 0.01uF 10% 100V	CCG04	CKR05BX103KRV	56289
L01	Core, Ferrite, 2 hole, 4B1 mtl	LA42	MHB2-14/8.5/14-4B1	FERROX
L01	Wire, 16 AWG, Stranded, White	WB05	H0102005	SUPRE
L02	Inductor, used with PA NAPA16 & 20	LA51	198-1035	37338
L03	Inductor, horseshoe used inNAPA24	LA58	216-1184	
Q01	Transistor, (BeO), FET, NChannel, Dual	QAP58	SD2942(STATIC)	ST MICRO
R01	Resistor,SMT,MF,20ohms,1%,2W	RAD50	CR2512-2W-20R0F	VENKEL
R02	Resistor,SMT,MF,20ohms,1%,2W	RAD50	CR2512-2W-20R0F	VENKEL
R03	Resistor, SMT, MF, 15K Ohms,1%, 1/4W	RAD39	RK73H2BL1502F	59124
R04	Resistor,SMT,MF,20ohms,1%,2W	RAD50	CR2512-2W-20R0F	VENKEL
R05	Resistor, SMT, MF, 47.5K Ohms, 1% 1/4W	RAD45	RK73H2BL4752F	59124
R06	Resistor,SMT,MF,20ohms,1%,2W	RAD50	CR2512-2W-20R0F	VENKEL
R07	Resistor,SMT,MF,20ohms,1%,2W	RAD50	CR2512-2W-20R0F	VENKEL
R08	Resistor, SMT, MF, 47.5K Ohms, 1% 1/4W	RAD45	RK73H2BL4752F	59124
R09	Resistor,SMT,MF,20ohms,1%,2W	RAD50	CR2512-2W-20R0F	VENKEL

Continued from previous page

NAPA24 PA PWB Assy, NOAA

REFDES	DESCRIPTION	NAUTEL #	VENDOR #	OEM CODE
R10	Resistor, SMT, MF, 15K Ohms,1%, 1/4W	RAD39	RK73H2BL1502F	59124
R11	Resistor, SMT, MF, 10 Ohms, 1% 1/4W	RAD01	RK73H2BL10R0F	59124
R12	Resistor, SMT, MF, 10 Ohms, 1% 1/4W	RAD01	RK73H2BL10R0F	59124
T01	Cable,Coax,50 ohm,82.5% VP,SRJacket,NEWcel-GX16	WE46	N32-32S-259-6	74116
T02A	Wire, 16 AWG, 1-Cond/Shield, Teflon	WF22	83308	70903
T02B	Wire, 16 AWG, 1-Cond/Shield, Teflon	WF22	83308	70903
T03	Wire, 22 AWG, Stranded, 1-cond/shield,Tef	WF17	83305	70903

Pre-Amp/IPA PWB Assy - NOAA

REFDES	DESCRIPTION	NAUTEL #	VENDOR #	OEM CODE
C01	Capacitor, SMT, Ceramic, 1000pF, 5%, 63V	CT20	1206CG102J9BB2	05093
C02	Cap,SMT,Ceramic,0.1uF,10%,50V,X7R,0805	CCFS07	C0805C104K5RAC	31433
C03	Capacitor, SMT, Porcelain,24pF 500V, 2%	CS81	ATC100B240GT500X	29990
C04	Capacitor, SMT, Ceramic, 0.022uF, 100V, 10%, 1206	CT61	12061C223KAT2A	56289
C05	Capacitor, SMT, Ceramic, 0.022uF, 100V, 10%, 1206	CT61	12061C223KAT2A	56289
C06	Capacitor, SMT, Ceramic, 1000pF, 5%, 63V	CT20	1206CG102J9BB2	05093
C07	Capacitor, SMT, Ceramic, 0.022uF, 100V, 10%, 1206	CT61	12061C223KAT2A	56289
C08	Capacitor, SMT, Ceramic, 0.1uF 10%, 100V	CT66	C1206C104K1RACTU(RoHS) Kemet	31433
C09	Capacitor, SMT, Ceramic, 0.022uF, 100V, 10%, 1206	CT61	12061C223KAT2A	56289
C10	Cap,SMT,Ceramic,0.1uF,10%,50V,X7R,0805	CCFS07	C0805C104K5RAC	31433
C11	Cap,SMT,Ceramic,0.1uF,10%,50V,X7R,0805	CCFS07	C0805C104K5RAC	31433
C12	Capacitor, SMT, Ceramic, 0.022uF, 100V, 10%, 1206	CT61	12061C223KAT2A	56289
C13	Capacitor, SMT, Porcelain,1.2pF, 500V, +/-0.1pF	CS85	ATC100B1R2BT500XT	29990
C14	Capacitor, SMT, Ceramic, 1000pF, 5%, 63V	CT20	1206CG102J9BB2	05093
C15	Capacitor, SMT, Ceramic, 1000pF, 5%, 63V	CT20	1206CG102J9BB2	05093
C16	Capacitor, SMT, Ceramic, 51pF,5%, NPO, 50V	CT67	C1206C510J5GACTU(RoHS) KEMET	31433
C17	Not Used	-	NOT USED	37338
C18	Cap,SMT,Ceramic,0.1uF,10%,50V,X7R,0805	CCFS07	C0805C104K5RAC	31433
C19	Capacitor, SMT, Ceramic, 0.022uF, 100V, 10%, 1206	CT61	12061C223KAT2A	56289
C20	Capacitor,SMT,Ceramic,0.001uF,50V,10%	CT53	ATC100B102KW50X	29990
C21	Capacitor, SMT, Ceramic, 0.022uF, 100V, 10%, 1206	CT61	12061C223KAT2A	56289
C22	Capacitor, SMT, Ceramic, 0.1uF 10%, 100V	CT66	C1206C104K1RACTU(RoHS) Kemet	31433
C23	Capacitor, SMT, Ceramic, 2.2uF 10%, 100V, X7R, 1812	CT64	GRM43ER72A225KA0 1L	72982
C24	Capacitor, SMT, Porcelain,56pF 500V, 2%	CS84	ATC100B560GW500X	29990
C25	Capacitor,SMT,Ceramic,0.001uF,50V,10%	CT53	ATC100B102KW50X	29990
F01	Fuse, SMT, Fuse Block, 1A, Very Fast Installed	FA55	154001(RoHS)	75915
F02	Fuse, SMT, Fuse Block, 7A VeryFast Acting Installed	FA56	0154007(RoHS)	75915
L01	Bead, Ferrite, SMT, 95 ohm,2.85mm H x 9.6mm Lg	LA56	2743021447	34899
L02	Bead, Ferrite, SMT, 95 ohm,2.85mm H x 9.6mm Lg	LA56	2743021447	34899
L03	Inductor, SMT, 17.5nH, 5%, 4A3.15mm H x 6.86mm L	LS33	B06TJLC	
L04	Inductor, SMT, 82nH, 2%, 2.5A,4.20mm H x 4.95mm	LS26	1812SMS-82NGLC	02113
L05	Bead, Ferrite, SMT, 95 ohm,2.85mm H x 9.6mm Lg	LA56	2743021447	34899
L06	Inductor, SMT, 82nH, 2%, 2.5A,4.20mm H x 4.95mm	LS26	1812SMS-82NGLC	02113
L07	Inductor, SMT, 35.5nH, 2%, 4A,3.15mm H x 6.86mm Lg	LS28	B09TGLC	02113
L08	Inductor, SMT, 43nH, 2%, 4A,3.15mm H x 6.86mm Lg	LS29	B10TGLC	02113
L09	Inductor, SMT, 12.5nH, 2%, 4A3.15mm H x 3.94mm L	LS32	A04TGLC	
L10	Inductor, SMT, 17.5nH, 5%, 4A3.15mm H x 6.86mm L	LS33	B06TJLC	

Continued from previous page

NAPA26 Pre-Amp/IPA PWB Assy - NOAA

REFDES	DESCRIPTION	NAUTEL #	VENDOR #	OEM CODE
L11	Bead, Ferrite, SMT, 47ohm,2.85mm H x 5.10mm Lg	LA57	2743019447	34899
L12	Bead, Ferrite, SMT, 95 ohm,2.85mm H x 9.6mm Lg	LA56	2743021447	34899
L13	Inductor, used with PA NAPA16 & 20	LA51	198-1035	37338
L14	Inductor, NOAA IPA Drain,2.5nH	LA60	216-1194	
Q01	Transistor, FET, N-Channel, LDMOS, 10W, 50V	QAP60	MRF6V2010NBR1(STATIC)	
Q02	Transistor, FET, N-Channel LDMOS, 150W, 50V	QAP61	MRF6V2150NBR1(STATIC)	
R01	Resistor, SMT, MF, 100 Ohms,1% 1/4W	RAD13	RK73H2BL1000F	59124
R02	Resistor, SMT, MF, 27.4 Ohms,1% 1/4W	RAD06	RK73H2BL27R4F	59124
R03	Resistor, SMT, MF, 121 Ohms,1% 1/4W	RAD14	RK73H2BL1210F	59124

REFDES	DESCRIPTION	NAUTEL #	VENDOR #	OEM CODE
C001	Cap,SMT,Ceramic,0.01uF,10%,50V,X7R,0603	CCFS04	C0603C103K5RAC	31433
C002	Cap,SMT,Ceramic,100pF,2%,50V,C0G,0603	CCFS32	C0603C101G5GAC	31433
C003	Cap,SMT,Ceramic,0.01uF,10%,50V,X7R,0603	CCFS04	C0603C103K5RAC	31433
C004	Cap, Double Layer Supercap,1.5F, 5.5V Stacked Coin	CAP74	EDLNF155B5R5C(STATIC)(RoHS)	2D829
C005	Cap, Double Layer Supercap,1.5F, 5.5V Stacked Coin	CAP74	EDLNF155B5R5C(STATIC)(RoHS)	2D829
C006	Cap, SMT, Ceramic, 0.1uF, 10%25V X7R, 0603	CCFS52	C0603C104K3RAC	31433
C007	Cap, SMT, Ceramic, 0.1uF, 10%25V X7R, 0603	CCFS52	C0603C104K3RAC	31433
C008	Cap, SMT, Ceramic, 0.1uF, 10%25V X7R, 0603	CCFS52	C0603C104K3RAC	31433
C009	Cap, SMT, Ceramic, 0.1uF, 10%25V X7R, 0603	CCFS52	C0603C104K3RAC	31433
C010	Cap,SMT,Ceramic,390pF,2%,50V,C0G,0603	CCFS37	C0603C391G5GAC	31433
C011	Cap,SMT,Ceramic,390pF,2%,50V,C0G,0603	CCFS37	C0603C391G5GAC	31433
C012	Cap, SMT, Ceramic, 0.1uF, 10%25V X7R, 0603	CCFS52	C0603C104K3RAC	31433
C013	Cap,SMT,Ceramic,0.01uF,10%,50V,X7R,0603	CCFS04	C0603C103K5RAC	31433
C014	Cap,SMT,Ceramic,100pF,2%,50V,C0G,0603	CCFS32	C0603C101G5GAC	31433
C015	Cap, SMT, Ceramic, 0.1uF, 10%25V X7R, 0603	CCFS52	C0603C104K3RAC	31433
C016	Cap, SMT, Ceramic, 0.1uF, 10%25V X7R, 0603	CCFS52	C0603C104K3RAC	31433
C017	Cap,SMT,Ceramic,390pF,2%,50V,C0G,0603	CCFS37	C0603C391G5GAC	31433
C018	Cap, SMT, Ceramic, 0.1uF, 10%25V X7R, 0603	CCFS52	C0603C104K3RAC	31433
C019	Cap, SMT, Ceramic, 0.1uF, 10%25V X7R, 0603	CCFS52	C0603C104K3RAC	31433
C020	Cap, SMT, Ceramic, 0.1uF, 10%25V X7R, 0603	CCFS52	C0603C104K3RAC	31433
C021	Cap,SMT,Ceramic,0.001uF,10%,50V,X7R,0603	CCFS01	C0603C102K5RAC	31433
C022	Cap, SMT, Ceramic, 0.1uF, 10%25V X7R, 0603	CCFS52	C0603C104K3RAC	31433
C023	Cap,SMT,Tantalum,47uF,10%,16V,2917	CTFS05	T494D476K016AS	31433
C024	Cap, SMT, Ceramic, 0.1uF, 10%25V X7R, 0603	CCFS52	C0603C104K3RAC	31433
C025	Cap, SMT, Ceramic, 0.1uF, 10%25V X7R, 0603	CCFS52	C0603C104K3RAC	31433
C026	Cap, SMT, Ceramic, 0.1uF, 10%25V X7R, 0603	CCFS52	C0603C104K3RAC	31433
C027	Cap,SMT,Ceramic,0.01uF,10%,50V,X7R,0603	CCFS04	C0603C103K5RAC	31433
C028	Cap,SMT,Ceramic,100pF,2%,50V,C0G,0603	CCFS32	C0603C101G5GAC	31433
C029	Cap, SMT, Ceramic, 0.1uF, 10%25V X7R, 0603	CCFS52	C0603C104K3RAC	31433
C030	Cap,SMT,Ceramic,390pF,2%,50V,C0G,0603	CCFS37	C0603C391G5GAC	31433
C031	Cap, SMT, Ceramic, 0.1uF, 10%25V X7R, 0603	CCFS52	C0603C104K3RAC	31433
C032	Cap,SMT,Ceramic,0.01uF,10%,50V,X7R,0603	CCFS04	C0603C103K5RAC	31433
C033	Cap, SMT, Ceramic, 0.1uF, 10%25V X7R, 0603	CCFS52	C0603C104K3RAC	31433
C034	Cap, SMT, Ceramic, 0.1uF, 10%25V X7R, 0603	CCFS52	C0603C104K3RAC	31433
C035	Cap,SMT,Ceramic,0.001uF,10%,50V,X7R,0603	CCFS01	C0603C102K5RAC	31433
C036	Cap, SMT, Ceramic, 0.1uF, 10%25V X7R, 0603	CCFS52	C0603C104K3RAC	31433
C037	Cap, SMT, Ceramic, 0.1uF, 10%25V X7R, 0603	CCFS52	C0603C104K3RAC	31433
C038	Cap, SMT, Ceramic, 0.1uF, 10%25V X7R, 0603	CCFS52	C0603C104K3RAC	31433

Continued from previous page

REFDES	DESCRIPTION	NAUTEL #	VENDOR #	OEM CODE
C039	Cap, SMT, Ceramic, 0.1uF, 10%25V X7R, 0603	CCFS52	C0603C104K3RAC	31433
C040	Cap, SMT, Ceramic, 0.1uF, 10%25V X7R, 0603	CCFS52	C0603C104K3RAC	31433
C041	Cap, SMT, Ceramic, 0.1uF, 10%25V X7R, 0603	CCFS52	C0603C104K3RAC	31433
C042	Cap, SMT, Ceramic, 0.1uF, 10%25V X7R, 0603	CCFS52	C0603C104K3RAC	31433
C043	Cap, SMT, Ceramic, 0.1uF, 10%25V X7R, 0603	CCFS52	C0603C104K3RAC	31433
C044	Cap, SMT, Ceramic, 0.1uF, 10%25V X7R, 0603	CCFS52	C0603C104K3RAC	31433
C045	Cap, SMT, Ceramic, 0.1uF, 10%25V X7R, 0603	CCFS52	C0603C104K3RAC	31433
C046	Cap, SMT, Ceramic, 0.1uF, 10%25V X7R, 0603	CCFS52	C0603C104K3RAC	31433
C047	Cap,SMT,Ceramic,0.01uF,10%,50V,X7R,0603	CCFS04	C0603C103K5RAC	31433
C048	Cap, SMT, Ceramic, 0.1uF, 10%25V X7R, 0603	CCFS52	C0603C104K3RAC	31433
C049	Cap, SMT, Ceramic, 0.1uF, 10%25V X7R, 0603	CCFS52	C0603C104K3RAC	31433
C050	Cap, SMT, Ceramic, 0.1uF, 10%25V X7R, 0603	CCFS52	C0603C104K3RAC	31433
C051	Cap, SMT, Ceramic, 0.1uF, 10%25V X7R, 0603	CCFS52	C0603C104K3RAC	31433
C052	Cap, SMT, Ceramic, 0.1uF, 10%25V X7R, 0603	CCFS52	C0603C104K3RAC	31433
C053	Cap, SMT, Ceramic, 0.1uF, 10%25V X7R, 0603	CCFS52	C0603C104K3RAC	31433
C054	Cap, SMT, Ceramic, 0.1uF, 10%25V X7R, 0603	CCFS52	C0603C104K3RAC	31433
C055	Cap, SMT, Ceramic, 0.1uF, 10%25V X7R, 0603	CCFS52	C0603C104K3RAC	31433
C056	Cap,SMT,Tantalum,10uF,10%,16V,1411	CTFS01	T494B106K016AS	31433
C057	Cap, SMT, Ceramic, 0.1uF, 10%25V X7R, 0603	CCFS52	C0603C104K3RAC	31433
C058	Cap, SMT, Ceramic, 0.1uF, 10%25V X7R, 0603	CCFS52	C0603C104K3RAC	31433
C059	Cap, SMT, Ceramic, 0.1uF, 10%25V X7R, 0603	CCFS52	C0603C104K3RAC	31433
C060	Cap, SMT, Ceramic, 0.1uF, 10%25V X7R, 0603	CCFS52	C0603C104K3RAC	31433
C061	Cap, SMT, Ceramic, 0.1uF, 10%25V X7R, 0603	CCFS52	C0603C104K3RAC	31433
C062	Cap, SMT, Ceramic, 0.1uF, 10%25V X7R, 0603	CCFS52	C0603C104K3RAC	31433
C063	Cap, SMT, Ceramic, 0.1uF, 10%25V X7R, 0603	CCFS52	C0603C104K3RAC	31433
C064	Cap, SMT, Ceramic, 0.1uF, 10%25V X7R, 0603	CCFS52	C0603C104K3RAC	31433
C065	Cap, SMT, Ceramic, 0.1uF, 10%25V X7R, 0603	CCFS52	C0603C104K3RAC	31433
C066	Cap, SMT, Ceramic, 0.1uF, 10%25V X7R, 0603	CCFS52	C0603C104K3RAC	31433
C067	Cap, SMT, Ceramic, 0.1uF, 10%25V X7R, 0603	CCFS52	C0603C104K3RAC	31433
C068	Cap, SMT, Ceramic, 0.1uF, 10%25V X7R, 0603	CCFS52	C0603C104K3RAC	31433
C069	Cap, SMT, Ceramic, 0.1uF, 10%25V X7R, 0603	CCFS52	C0603C104K3RAC	31433
C070	Cap, SMT, Ceramic, 0.1uF, 10%25V X7R, 0603	CCFS52	C0603C104K3RAC	31433
C071	Cap, SMT, Ceramic, 0.1uF, 10%25V X7R, 0603	CCFS52	C0603C104K3RAC	31433
C072	Cap, SMT, Ceramic, 0.1uF, 10%25V X7R, 0603	CCFS52	C0603C104K3RAC	31433
C073	Cap, SMT, Ceramic, 0.1uF, 10%25V X7R, 0603	CCFS52	C0603C104K3RAC	31433
C074	Cap, SMT, Ceramic, 0.1uF, 10%25V X7R, 0603	CCFS52	C0603C104K3RAC	31433
C075	Cap, SMT, Ceramic, 0.1uF, 10%25V X7R, 0603	CCFS52	C0603C104K3RAC	31433
C076	Cap, SMT, Ceramic, 0.1uF, 10%25V X7R, 0603	CCFS52	C0603C104K3RAC	31433
C077	Cap, SMT, Ceramic, 0.1uF, 10%25V X7R, 0603	CCFS52	C0603C104K3RAC	31433

Continued from previous page

REFDES	DESCRIPTION	NAUTEL #	VENDOR #	OEM CODE
C078	Cap, SMT, Ceramic, 0.1uF, 10%25V X7R, 0603	CCFS52	C0603C104K3RAC	31433
C079	Cap, SMT, Ceramic, 0.1uF, 10%25V X7R, 0603	CCFS52	C0603C104K3RAC	31433
C080	Cap,SMT,Ceramic,0.1uF,10%,50V,X7R,0805	CCFS07	C0805C104K5RAC	31433
C081	Cap,SMT,Ceramic,1uF,10%,25V,,X7R,1206	CCFS10	C1206C105K3RAC	31433
C082	Cap, SMT, Ceramic, 0.1uF, 10%25V X7R, 0603	CCFS52	C0603C104K3RAC	31433
C083	Cap, SMT, Ceramic, 0.1uF, 10%25V X7R, 0603	CCFS52	C0603C104K3RAC	31433
C084	Cap, SMT, Ceramic, 0.1uF, 10%25V X7R, 0603	CCFS52	C0603C104K3RAC	31433
C085	Cap, SMT, Ceramic, 0.1uF, 10%25V X7R, 0603	CCFS52	C0603C104K3RAC	31433
C086	Cap,SMT,Tantalum,10uF,10%,16V,1411	CTFS01	T494B106K016AS	31433
C087	Cap,SMT,Ceramic,100pF,2%,50V,C0G,0603	CCFS32	C0603C101G5GAC	31433
C088	Cap,SMT,Ceramic,0.1uF,10%,50V,X7R,0805	CCFS07	C0805C104K5RAC	31433
C089	Cap, SMT, Ceramic, 0.1uF, 10%25V X7R, 0603	CCFS52	C0603C104K3RAC	31433
C090	Capacitor, Elect, 8200uF 35V	CX13	82DA822M035JC2D	62643
C091	Cap, SMT, Ceramic, 0.1uF, 10%25V X7R, 0603	CCFS52	C0603C104K3RAC	31433
C092	Cap,SMT,Ceramic,100pF,2%,50V,C0G,0603	CCFS32	C0603C101G5GAC	31433
C093	Cap,SMT,Tantalum,100uF,10%,10V,2917	CTFS04	T495D107K010AS(RoHS)	31433
C094	Cap,SMT,Tantalum,10uF,10%,35V,2917	CTFS03	T494D106K035AS	31433
C095	Cap,SMT,Ceramic,100pF,2%,50V,C0G,0603	CCFS32	C0603C101G5GAC	31433
C096	Cap, SMT, Ceramic, 0.1uF, 10%25V X7R, 0603	CCFS52	C0603C104K3RAC	31433
C097	Capacitor, Elect, 8200uF 35V	CX13	82DA822M035JC2D	62643
C098	Cap,SMT,Ceramic,100pF,2%,50V,C0G,0603	CCFS32	C0603C101G5GAC	31433
C099	Cap,SMT,Tantalum,100uF,10%,10V,2917	CTFS04	T495D107K010AS(RoHS)	31433
C100	Cap,SMT,Ceramic,0.01uF,10%,50V,X7R,0603	CCFS04	C0603C103K5RAC	31433
C101	Cap,SMT,Ceramic,100pF,2%,50V,C0G,0603	CCFS32	C0603C101G5GAC	31433
C102	Cap,SMT,Ceramic,100pF,2%,50V,C0G,0603	CCFS32	C0603C101G5GAC	31433
C103	Cap, SMT, Ceramic, 10uF, 10%,25V	CCFS62	C3225X5R1E106K	
C104	Cap, SMT, Ceramic, 0.1uF, 10%25V X7R, 0603	CCFS52	C0603C104K3RAC	31433
C105	Cap, SMT, Ceramic, 0.1uF, 10%25V X7R, 0603	CCFS52	C0603C104K3RAC	31433
C106	Cap,SMT,Ceramic,100pF,2%,50V,C0G,0603	CCFS32	C0603C101G5GAC	31433
C107	Cap,SMT,Ceramic,100pF,2%,50V,C0G,0603	CCFS32	C0603C101G5GAC	31433
C108	Capacitor, Elect, 100uF 20% 25V	CAP42	KME25VB101M6X11LL	1W344
C109	Capacitor, Elect, 100uF 20% 25V	CAP42	KME25VB101M6X11LL	1W344
C87	Cap,SMT,Ceramic,100pF,2%,50V,C0G,0603	CCFS32	C0603C101G5GAC	31433
C92	Cap,SMT,Ceramic,100pF,2%,50V,C0G,0603	CCFS32	C0603C101G5GAC	31433
CR01	Diode,SMT,Switching,250V,0.2A,SOD-323	QDRS01	BAS21HT1(STATIC)	04713
CR02	Diode,SMT,Switching,250V,0.2A,SOD-323	QDRS01	BAS21HT1(STATIC)	04713
CR03	Diode,SMT,Ultrafast,200V,1A,SMB	QM47	MURS120T3	04713

Continued from previous page

REFDES	DESCRIPTION	NAUTEL #	VENDOR #	OEM CODE
CR04	Diode,SMT,Switching,250V,0.2A,SOD-323	QDRS01	BAS21HT1(STATIC)	04713
CR05	Diode,SMT,Switching,250V,0.2A,SOD-323	QDRS01	BAS21HT1(STATIC)	04713
CR06	Diode,SMT,Switching,250V,0.2A,SOD-323	QDRS01	BAS21HT1(STATIC)	04713
CR07	Diode,SMT,Switching,250V,0.2A,SOD-323	QDRS01	BAS21HT1(STATIC)	04713
CR08	Diode,SMT,Switching,250V,0.2A,SOD-323	QDRS01	BAS21HT1(STATIC)	04713
CR09	Diode,SMT,Switching,250V,0.2A,SOD-323	QDRS01	BAS21HT1(STATIC)	04713
CR10	Diode,SMT,Switching,250V,0.2A,SOD-323	QDRS01	BAS21HT1(STATIC)	04713
CR11	Diode,SMT,Zener,39V,5%,3W,SMB	QDZS04	1SMB5939BT3	04713
CR12	Not Used	-	NOT USED	37338
CR13	Diode,SMT,Switching,250V,0.2A,SOD-323	QDRS01	BAS21HT1(STATIC)	04713
CR14	Diode,SMT,Switching,250V,0.2A,SOD-323	QDRS01	BAS21HT1(STATIC)	04713
CR15	Diode,SMT,Switching,250V,0.2A,SOD-323	QDRS01	BAS21HT1(STATIC)	04713
CR16	Diode,SMT,Switching,250V,0.2A,SOD-323	QDRS01	BAS21HT1(STATIC)	04713
CR17	Diode,SMT,Switching,250V,0.2A,SOD-323	QDRS01	BAS21HT1(STATIC)	04713
CR18	Diode,SMT,Switching,250V,0.2A,SOD-323	QDRS01	BAS21HT1(STATIC)	04713
CR19	Diode,SMT,Switching,250V,0.2A,SOD-323	QDRS01	BAS21HT1(STATIC)	04713
CR20	Diode,SMT,Switching,250V,0.2A,SOD-323	QDRS01	BAS21HT1(STATIC)	04713
CR21	Diode,SMT,Switching,250V,0.2A,SOD-323	QDRS01	BAS21HT1(STATIC)	04713
CR22	Diode,SMT,Switching,250V,0.2A,SOD-323	QDRS01	BAS21HT1(STATIC)	04713
CR23	Diode, SMT, Shottky, 40V, 3A,SMA	QDSS03	MBRA340T3G(STATIC)(RoHS)	
CR24	Diode,SMT,Switching,250V,0.2A,SOD-323	QDRS01	BAS21HT1(STATIC)	04713
CR25	Diode,SMT,Switching,250V,0.2A,SOD-323	QDRS01	BAS21HT1(STATIC)	04713
CR26	Diode, Power Rectifier, 4A, Ultra Fast	QM22	MUR460	04713
CR27	Diode, Power Rectifier, 4A, Ultra Fast	QM22	MUR460	04713
CR28	Diode,SMT,Switching,250V,0.2A,SOD-323	QDRS01	BAS21HT1(STATIC)	04713
CR29	Diode,SMT,Switching,250V,0.2A,SOD-323	QDRS01	BAS21HT1(STATIC)	04713
CR30	Diode,SMT,Switching,250V,0.2A,SOD-323	QDRS01	BAS21HT1(STATIC)	04713
CR31	Diode,SMT,Switching,250V,0.2A,SOD-323	QDRS01	BAS21HT1(STATIC)	04713
CR32	Diode,SMT,Switching,250V,0.2A,SOD-323	QDRS01	BAS21HT1(STATIC)	04713
CR33	Diode,SMT,Switching,250V,0.2A,SOD-323	QDRS01	BAS21HT1(STATIC)	04713
CR34	Diode,SMT,Switching,250V,0.2A,SOD-323	QDRS01	BAS21HT1(STATIC)	04713
CR35	Diode,SMT,Switching,250V,0.2A,SOD-323	QDRS01	BAS21HT1(STATIC)	04713
DS01	Diode, SMT, LED, Green,(560nm), 0603	QDLS01	597-5312-402F(STATIC)(RoHS)	83330
J01	Terminal Block,2-pos,PWB Mount	JR51	1803277(ROHS)	PHOENIX
J02	Terminal Block,2-pos,PWB Mount	JR51	1803277(ROHS)	PHOENIX
J03	Conn, Header, 3-pos, PWB mount 90 deg	JR59	PHP03-5.00	
J04	Conn, Header, 3-pos, PWB mount 90 deg	JR59	PHP03-5.00	
J05	Conn, Header, 3-pos, PWB mount 90 deg	JR59	PHP03-5.00	

Continued from previous page

REFDES	DESCRIPTION	NAUTEL #	VENDOR #	OEM CODE
J06	Conn, BNC, Recept, Rt Angle, PWB Mt	JS21	R141665161	0GP12
J07	Conn, BNC, Recept, Rt Angle, PWB Mt	JS21	R141665161	0GP12
J08	Conn, BNC, Recept, Rt Angle, PWB Mt	JS21	R141665161	0GP12
J09	Connector, Dual, D-Sub, F/F,9 pin, Rt. Angle, PWB	JT99	1734285-3(RoHS)	09482
J10	Conn, Dual, D-Sub, F/M, 9 pin, Rt. Angle, PWB	JT121	178-009-313R571(RoHS)	1L3S8
J11	Conn, Dual, D-Sub, F/M, 15 pin, Rt Angle, PWB	JT101	178-015-313R571	63590
J12	Terminal Block,2-pos,PWB Mount	JR51	1803277(ROHS)	PHOENIX
J13	Conn, Header, Ribbon Cbl, 40-Pin	JQ53	103308-8	00779
J14	Conn, Header, SIP,12 Pin Breakaway,.10 Ctr	JQ16	1-103185-2	09482
J15	Conn, Header, Ribbon Cable, 16 pin	JQ73	5103308-3(RoHS)	00779
J16	MTA, Square Post Header Assy,4 pin	JU20	640383-4	09482
J17	MTA, Square Post Header Assy,4 pin	JU20	640383-4	09482
J18	Conn, Header,Square Post,Gold,Dual,40-pin	JF47	4-102973-0	09482
L01	Inductor, SMT, Choke, 600ohms,2A, 0805	LCFS01	ILHB0805RK601V	56845
L02	Inductor, SMT, Shielded, DRSeries, 15uH, 4A RMS	LS35	DR125-150-R(RoHS)	005K5
Q01	Transistor,SMT,NPN,Switch/Amp,SOT-23	QBNS01	MMBT4401LT1(STATIC)	04713
Q02	Transistor,SMT,NPN,Switch/Amp,SOT-23	QBNS01	MMBT4401LT1(STATIC)	04713
Q03	Transistor,SMT,NPN,Switch/Amp,SOT-23	QBNS01	MMBT4401LT1(STATIC)	04713
Q04	Transistor, FET, P-Channel, Plas	QR41	IRF9510(STATIC)	81483
Q05	Transistor,SMT,NPN,Switch/Amp,SOT-23	QBNS01	MMBT4401LT1(STATIC)	04713
Q06	Transistor, FET, P-Channel, Plas	QR41	IRF9510(STATIC)	81483
Q07	Transistor,SMT,NPN,Switch/Amp,SOT-23	QBNS01	MMBT4401LT1(STATIC)	04713
Q08	Transistor,SMT,NPN,Switch/Amp,SOT-23	QBNS01	MMBT4401LT1(STATIC)	04713
R001	Resistor,SMT,MF,332ohms,1%,1/10W,0603	RFFS32	RK73H1JLTD3320F	59124
R002	Resistor,SMT,MF,100ohms,1%,1/10W,0603	RFFS26	RK73H1JLTD1000F	59124
R003	Resistor,SMT,MF,10.0Kohms,1%,1/10W,0603	RFFS50	RK73H1JLTD1002F	59124
R004	Resistor,SMT,MF,1000ohms,1%,1/10W,0603	RFFS38	RK73H1JLTD1001F	59124
R005	Resistor, SMT, MF, 681 Ohms,1% 1/4W	RAD23	MCR18EZHF6810(ROHS)	ROHM
R006	Resistor, SMT, MF, 681 Ohms,1% 1/4W	RAD23	MCR18EZHF6810(ROHS)	ROHM
R007	Resistor, SMT, MF, 681 Ohms,1% 1/4W	RAD23	MCR18EZHF6810(ROHS)	ROHM
R008	Resistor, SMT, MF, 681 Ohms,1% 1/4W	RAD23	MCR18EZHF6810(ROHS)	ROHM
R009	Resistor, SMT, MF, 100 Ohms,1% 1/4W	RAD13	RK73H2BL1000F	59124
R010	Resistor,SMT,MF,10.0Kohms,1%,1/10W,0603	RFFS50	RK73H1JLTD1002F	59124
R011	Resistor,SMT,MF,10.0Kohms,1%,1/10W,0603	RFFS50	RK73H1JLTD1002F	59124

Continued from previous page

REFDES	DESCRIPTION	NAUTEL #	VENDOR #	OEM CODE
R012	Not Used	-	NOT USED	37338
R013	Resistor,SMT,MF,392ohms,1%,1/10W,0603	RFFS33	RK73H1JLTD3920F	59124
R014	Resistor,SMT,MF,56.2ohms,1%,1/10W,0603	RFFS23	RK73H1JLTD56R2F	59124
R015	Resistor,SMT,MF,10.0Kohms,1%,1/10W,0603	RFFS50	RK73H1JLTD1002F	59124
R016	Resistor,SMT,MF,56.2ohms,1%,1/10W,0603	RFFS23	RK73H1JLTD56R2F	59124
R017	Resistor,SMT,MF,392ohms,1%,1/10W,0603	RFFS33	RK73H1JLTD3920F	59124
R018	Resistor,SMT,MF,1500ohms,1%,1/10W,0603	RFFS40	RK73H1JLTD1501F	59124
R019	Resistor, SMT, MF, 68.1 Ohms,1% 1/4W	RAD11	RK73H2BL68R1F	59124
R020	Not Used	-	NOT USED	37338
R021	Resistor,SMT,MF,10.0Kohms,1%,1/10W,0603	RFFS50	RK73H1JLTD1002F	59124
R022	Resistor,SMT,MF,475Kohms,1%,1/10W,0603	RFFS70	RK73H1JLTD4753F	59124
R023	Resistor,SMT,MF,10.0Kohms,1%,1/10W,0603	RFFS50	RK73H1JLTD1002F	59124
R024	Resistor,SMT,MF,3320ohms,1%,1/10W,0603	RFFS44	RK73H1JLTD3321F	59124
R025	Resistor,SMT,MF,10.0Kohms,1%,1/10W,0603	RFFS50	RK73H1JLTD1002F	59124
R026	Resistor,SMT,MF,10.0Kohms,1%,1/10W,0603	RFFS50	RK73H1JLTD1002F	59124
R027	Resistor,SMT,MF,22.1ohms,1%,1/10W,0603	RFFS18	RK73H1JLTD22R1F	59124
R028	Resistor,SMT,MF,22.1ohms,1%,1/10W,0603	RFFS18	RK73H1JLTD22R1F	59124
R029	Resistor,SMT,MF,10.0Kohms,1%,1/10W,0603	RFFS50	RK73H1JLTD1002F	59124
R030	Resistor, SMT, MF, 68.1 Ohms,1% 1/4W	RAD11	RK73H2BL68R1F	59124
R031	Resistor,SMT,MF,4750ohms,1%,1/10W,0603	RFFS46	RK73H1JLTD4751F	59124
R032	Resistor,SMT,MF,221ohms,1%,1/10W,0603	RFFS30	RK73H1JLTD2210F	59124
R033	Resistor,SMT,MF,681ohms,1%,1/10W,0603	RFFS36	RK73H1JLTD6810F	59124
R034	Resistor, SMT, MF, 68.1 Ohms,1% 1/4W	RAD11	RK73H2BL68R1F	59124
R035	Resistor,SMT,MF,10.0Kohms,1%,1/10W,0603	RFFS50	RK73H1JLTD1002F	59124
R036	Resistor,SMT,MF,10.0Kohms,1%,1/10W,0603	RFFS50	RK73H1JLTD1002F	59124
R037	Resistor,SMT,MF,475Kohms,1%,1/10W,0603	RFFS70	RK73H1JLTD4753F	59124
R038	Resistor,SMT,MF,10.0Kohms,1%,1/10W,0603	RFFS50	RK73H1JLTD1002F	59124
R039	Resistor,SMT,MF,3320ohms,1%,1/10W,0603	RFFS44	RK73H1JLTD3321F	59124
R040	Resistor,SMT,MF,10.0Kohms,1%,1/10W,0603	RFFS50	RK73H1JLTD1002F	59124
R041	Resistor,SMT,MF,1000ohms,1%,1/10W,0603	RFFS38	RK73H1JLTD1001F	59124
R042	Resistor,SMT,MF,1000ohms,1%,1/10W,0603	RFFS38	RK73H1JLTD1001F	59124
R043	Resistor,SMT,MF,1000ohms,1%,1/10W,0603	RFFS38	RK73H1JLTD1001F	59124
R044	Resistor,SMT,MF,100ohms,1%,1/10W,0603	RFFS26	RK73H1JLTD1000F	59124
R045	Resistor,SMT,MF,1000ohms,1%,1/10W,0603	RFFS38	RK73H1JLTD1001F	59124
R046	Resistor,SMT,MF,10.0Kohms,1%,1/10W,0603	RFFS50	RK73H1JLTD1002F	59124
R047	Resistor,SMT,MF,100ohms,1%,1/10W,0603	RFFS26	RK73H1JLTD1000F	59124
R048	Resistor,SMT,MF,4750ohms,1%,1/10W,0603	RFFS46	RK73H1JLTD4751F	59124
R049	Resistor,SMT,MF,1000ohms,1%,1/10W,0603	RFFS38	RK73H1JLTD1001F	59124
R050	Resistor,SMT,MF,100ohms,1%,1/10W,0603	RFFS26	RK73H1JLTD1000F	59124

Continued from previous page

REFDES	DESCRIPTION	NAUTEL #	VENDOR #	OEM CODE
R051	Resistor,SMT,MF,100ohms,1%,1/10W,0603	RFFS26	RK73H1JLTD1000F	59124
R052	Resistor,SMT,MF,10.0Kohms,1%,1/10W,0603	RFFS50	RK73H1JLTD1002F	59124
R053	Resistor,SMT,MF,10.0Kohms,1%,1/10W,0603	RFFS50	RK73H1JLTD1002F	59124
R054	Resistor,SMT,MF,2740ohms,1%,1/10W,0603	RFFS43	RK73H1JLTD2741F	59124
R055	Resistor,SMT,MF,10.0Kohms,1%,1/10W,0603	RFFS50	RK73H1JLTD1002F	59124
R056	Resistor,SMT,MF,4750ohms,1%,1/10W,0603	RFFS46	RK73H1JLTD4751F	59124
R057	Resistor,SMT,MF,1000ohms,1%,1/10W,0603	RFFS38	RK73H1JLTD1001F	59124
R058	Resistor,SMT,MF,22.1Kohms,1%,1/10W,0603	RFFS54	RK73H1JLTD2212F	59124
R059	Resistor,SMT,MF,10.0Kohms,1%,1/10W,0603	RFFS50	RK73H1JLTD1002F	59124
R060	Not Used	-	NOT USED	37338
R061	Resistor,SMT,MF,4750ohms,1%,1/10W,0603	RFFS46	RK73H1JLTD4751F	59124
R062	Resistor,SMT,MF,2210ohms,1%,1/10W,0603	RFFS42	RK73H1JLTD2211F	59124
R063	Resistor,SMT,MF,39.2Kohms,1%,1/10W,0603	RFFS57	RK73H1JLTD3922F	59124
R064	Resistor,SMT,MF,10.0Kohms,1%,1/10W,0603	RFFS50	RK73H1JLTD1002F	59124
R065	Resistor,SMT,MF,10.0Kohms,1%,1/10W,0603	RFFS50	RK73H1JLTD1002F	59124
R066	Resistor,SMT,MF,150Kohms,1%,1/10W,0603	RFFS64	RK73H1JLTD1503F	59124
R067	Resistor,SMT,MF,100Kohms,1%,1/10W,0603	RFFS62	RK73H1JLTD1003F	59124
R068	Resistor,SMT,MF,10.0Kohms,1%,1/10W,0603	RFFS50	RK73H1JLTD1002F	59124
R069	Resistor,SMT,MF,10.0Kohms,1%,1/10W,0603	RFFS50	RK73H1JLTD1002F	59124
R070	Resistor,SMT,MF,10.0Kohms,1%,1/10W,0603	RFFS50	RK73H1JLTD1002F	59124
R071	Resistor,SMT,MF,150Kohms,1%,1/10W,0603	RFFS64	RK73H1JLTD1503F	59124
R072	Resistor,SMT,MF,100Kohms,1%,1/10W,0603	RFFS62	RK73H1JLTD1003F	59124
R073	Resistor,SMT,MF,1000ohms,1%,1/10W,0603	RFFS38	RK73H1JLTD1001F	59124
R074	Resistor,SMT,MF,10.0Kohms,1%,1/10W,0603	RFFS50	RK73H1JLTD1002F	59124
R075	Resistor,SMT,MF,10.0Kohms,1%,1/10W,0603	RFFS50	RK73H1JLTD1002F	59124
R076	Resistor,SMT,MF,10.0Kohms,1%,1/10W,0603	RFFS50	RK73H1JLTD1002F	59124
R077	Resistor,SMT,MF,10.0Kohms,1%,1/10W,0603	RFFS50	RK73H1JLTD1002F	59124
R078	Resistor,SMT,MF,10.0Kohms,1%,1/10W,0603	RFFS50	RK73H1JLTD1002F	59124
R079	Resistor,SMT,MF,4750ohms,1%,1/10W,0603	RFFS46	RK73H1JLTD4751F	59124
R080	Resistor,SMT,MF,10.0Kohms,1%,1/10W,0603	RFFS50	RK73H1JLTD1002F	59124
R081	Resistor,SMT,MF,100ohms,1%,1/10W,0603	RFFS26	RK73H1JLTD1000F	59124
R082	Resistor,SMT,MF,100Kohms,1%,1/10W,0603	RFFS62	RK73H1JLTD1003F	59124
R083	Resistor,SMT,MF,100Kohms,1%,1/10W,0603	RFFS62	RK73H1JLTD1003F	59124
R084	Resistor,SMT,MF,100ohms,1%,1/10W,0603	RFFS26	RK73H1JLTD1000F	59124
R085	Resistor,SMT,MF,100Kohms,1%,1/10W,0603	RFFS62	RK73H1JLTD1003F	59124
R086	Resistor,SMT,MF,100Kohms,1%,1/10W,0603	RFFS62	RK73H1JLTD1003F	59124
R087	Resistor,SMT,MF,100Kohms,1%,1/10W,0603	RFFS62	RK73H1JLTD1003F	59124
R088	Resistor,SMT,MF,4750ohms,1%,1/10W,0603	RFFS46	RK73H1JLTD4751F	59124
R089	Resistor,SMT,MF,1000ohms,1%,1/10W,0603	RFFS38	RK73H1JLTD1001F	59124

Continued from previous page

REFDES	DESCRIPTION	NAUTEL #	VENDOR #	OEM CODE
R090	Not Used	-	NOT USED	37338
R091	Resistor,SMT,MF,4750ohms,1%,1/10W,0603	RFFS46	RK73H1JLTD4751F	59124
R092	Resistor,SMT,MF,1000ohms,1%,1/10W,0603	RFFS38	RK73H1JLTD1001F	59124
R093	Resistor,SMT,MF,10.0Kohms,1%,1/10W,0603	RFFS50	RK73H1JLTD1002F	59124
R094	Not Used	-	NOT USED	37338
R095	Resistor,SMT,MF,10.0Kohms,1%,1/10W,0603	RFFS50	RK73H1JLTD1002F	59124
R096	Resistor,SMT,MF,4750ohms,1%,1/10W,0603	RFFS46	RK73H1JLTD4751F	59124
R097	Resistor,SMT,MF,1.00Mohms,1%,1/10W,0603	RFFS74	RK73H1JLTD1004F	59124
R098	Resistor,SMT,MF,10.0Kohms,1%,1/10W,0603	RFFS50	RK73H1JLTD1002F	59124
R099	Resistor,SMT,MF,10.0Kohms,1%,1/10W,0603	RFFS50	RK73H1JLTD1002F	59124
R100	Resistor,SMT,MF,562ohms,1%,1/10W,0603	RFFS35	RK73H1JLTD5620F	59124
R101	Resistor,SMT,MF,562ohms,1%,1/10W,0603	RFFS35	RK73H1JLTD5620F	59124
R102	Resistor,SMT,MF,1000ohms,1%,1/10W,0603	RFFS38	RK73H1JLTD1001F	59124
R103	Resistor,SMT,MF,1000ohms,1%,1/10W,0603	RFFS38	RK73H1JLTD1001F	59124
R104	Resistor,SMT,MF,15.0Kohms,1%,1/10W,0603	RFFS52	RK73H1JLTD1502F	59124
R105	Resistor,SMT,MF,562ohms,1%,1/10W,0603	RFFS35	RK73H1JLTD5620F	59124
R106	Resistor,SMT,MF,562ohms,1%,1/10W,0603	RFFS35	RK73H1JLTD5620F	59124
R107	Resistor,SMT,MF,8250ohms,1%,1/10W,0603	RFFS49	RK73H1JLTD8251F	59124
R108	Resistor,SMT,MF,562ohms,1%,1/10W,0603	RFFS35	RK73H1JLTD5620F	59124
R109	Resistor,SMT,MF,562ohms,1%,1/10W,0603	RFFS35	RK73H1JLTD5620F	59124
R110	Resistor,SMT,MF,562ohms,1%,1/10W,0603	RFFS35	RK73H1JLTD5620F	59124
R111	Resistor,SMT,MF,1000ohms,1%,1/10W,0603	RFFS38	RK73H1JLTD1001F	59124
R112	Resistor,SMT,MF,3320ohms,1%,1/10W,0603	RFFS44	RK73H1JLTD3321F	59124
R113	Resistor,SMT,MF,3320ohms,1%,1/10W,0603	RFFS44	RK73H1JLTD3321F	59124
R114	Resistor,SMT,MF,1000ohms,1%,1/10W,0603	RFFS38	RK73H1JLTD1001F	59124
R115	Resistor,SMT,MF,8250ohms,1%,1/10W,0603	RFFS49	RK73H1JLTD8251F	59124
R116	Resistor,SMT,MF,562ohms,1%,1/10W,0603	RFFS35	RK73H1JLTD5620F	59124
R117	Resistor,SMT,MF,3320ohms,1%,1/10W,0603	RFFS44	RK73H1JLTD3321F	59124
R118	Resistor,SMT,MF,1000ohms,1%,1/10W,0603	RFFS38	RK73H1JLTD1001F	59124
R119	Resistor,SMT,MF,8250ohms,1%,1/10W,0603	RFFS49	RK73H1JLTD8251F	59124
R120	Resistor,SMT,MF,3320ohms,1%,1/10W,0603	RFFS44	RK73H1JLTD3321F	59124
R121	Resistor,SMT,MF,1000ohms,1%,1/10W,0603	RFFS38	RK73H1JLTD1001F	59124
R122	Resistor,SMT,MF,8250ohms,1%,1/10W,0603	RFFS49	RK73H1JLTD8251F	59124
R123	Resistor,SMT,MF,10.0Kohms,1%,1/10W,0603	RFFS50	RK73H1JLTD1002F	59124
R124	Resistor,SMT,MF,100ohms,1%,1/10W,0603	RFFS26	RK73H1JLTD1000F	59124
R125	Resistor,SMT,MF,10.0Kohms,1%,1/10W,0603	RFFS50	RK73H1JLTD1002F	59124
R126	Resistor,SMT,MF,100ohms,1%,1/10W,0603	RFFS26	RK73H1JLTD1000F	59124
R127	Resistor,SMT,MF,10.0Kohms,1%,1/10W,0603	RFFS50	RK73H1JLTD1002F	59124
R128	Resistor,SMT,MF,10.0Kohms,1%,1/10W,0603	RFFS50	RK73H1JLTD1002F	59124

Continued from previous page

REFDES	DESCRIPTION	NAUTEL #	VENDOR #	OEM CODE
R129	Resistor,SMT,MF,100Kohms,1%,1/10W,0603	RFFS62	RK73H1JLTD1003F	59124
R130	Resistor,SMT,MF,3320ohms,1%,1/10W,0603	RFFS44	RK73H1JLTD3321F	59124
R131	Resistor,SMT,MF,3320ohms,1%,1/10W,0603	RFFS44	RK73H1JLTD3321F	59124
R132	Resistor,SMT,MF,392ohms,1%,1/10W,0603	RFFS33	RK73H1JLTD3920F	59124
R133	Resistor,SMT,MF,10.0Kohms,1%,1/10W,0603	RFFS50	RK73H1JLTD1002F	59124
R134	Resistor,SMT,MF,100ohms,1%,1/10W,0603	RFFS26	RK73H1JLTD1000F	59124
R135	Resistor,SMT,MF,100ohms,1%,1/10W,0603	RFFS26	RK73H1JLTD1000F	59124
R136	Resistor, SMT, MF, 1000 Ohms,1% 1/4W	RAD25	RK73H2BL1001F	59124
R137	Resistor,SMT,MF,12.1Kohms,1%,1/10W,0603	RFFS51	RK73H1JLTD1212F	59124
R138	Resistor,SMT,MF,4750ohms,1%,1/10W,0603	RFFS46	RK73H1JLTD4751F	59124
R139	Resistor,SMT,MF,2210ohms,1%,1/10W,0603	RFFS42	RK73H1JLTD2211F	59124
RT01	Thermistor, PTC, .50-.77 Ohms, 0.5A Hold	RT16	RXE050	06090
T01	Transformer, Audio,600CT/600CT PWB Mt	TTAT02	SP-67(RoHS)	
TP01	Terminal, SMT, Test Point, PWB	HAJ66	TP-107-02-1-T(RoHS) COMPONENTS CORP	
TP02	Terminal, SMT, Test Point, PWB	HAJ66	TP-107-02-1-T(RoHS) COMPONENTS CORP	
TP03	Terminal, SMT, Test Point, PWB	HAJ66	TP-107-02-1-T(RoHS) COMPONENTS CORP	
TP04	Terminal, SMT, Test Point, PWB	HAJ66	TP-107-02-1-T(RoHS) COMPONENTS CORP	
TP05	Terminal, SMT, Test Point, PWB	HAJ66	TP-107-02-1-T(RoHS) COMPONENTS CORP	
TP06	Terminal, SMT, Test Point, PWB	HAJ66	TP-107-02-1-T(RoHS) COMPONENTS CORP	
TP07	Terminal, SMT, Test Point, PWB	HAJ66	TP-107-02-1-T(RoHS) COMPONENTS CORP	
TP08	Terminal, SMT, Test Point, PWB	HAJ66	TP-107-02-1-T(RoHS) COMPONENTS CORP	
U01	IC,SMT,CMOS,Phase Locked Loop,SO-16	UDLS08	LMX2306TM(STATIC)	27014
U02	IC,SMT,Voltage Regulator,+3.3V1A,TO-263	UT71	LM3940IS-3.3(STATIC)	27014
U03	IC, SMT, TruPwr Detect, LF-2.5GHz, MSOP	UX110	AD8361ARM(Static)	
U04	IC,SMT,CMOS,Hex Schm,Trig,Inv,SOIC-14	UDLS03	SN74AHCT14D(STATIC)	01295
U05	Oscillator, VC OCXO, 10.000MHz 3.3V Wide Temp	UT112	OC14C-10M000-B300XV(STATIC)	3C488
U06	IC, SMT, TruPwr Detect, LF-2.5GHz, MSOP	UX110	AD8361ARM(Static)	
U07	IC,SMT,DAC,16 Bit Serial,MSOP-8	UW64	DAC8531E(STATIC)	13919
U08	IC,SMT,3.3V Voltage Reference,SOT23-3	UX97	REF3033AIDBZT(STATIC)	13919
U09	IC,SMT,RS-232 Transceiver,3.3V,SO-16	UDTS05	ADM3202ARN(STATIC)	45496
U10	IC,SMT,Real-Time Clock,SPI,SOIC-16	UDTS01	M41T94MQ6(STATIC)	U3040
U11	IC,SMT,Trans Array, 7 Darl.,SOIC-16	UDAS01	MC1413BD(STATIC)	04713

Continued from previous page

NAPC157 System Controller PWB Assy -NOAA

REFDES	DESCRIPTION	NAUTEL #	VENDOR #	OEM CODE
U12	IC,SMT,4.096V Reference,0.1%,SOT-23-6	ULRS02	LT1790BIS6-4.096(STATIC)	64155
U13	IC,SMT,Micro,256K Flash,5V,TQFP-100	UX100	ATmega2560-16AU(STATIC)(ROHS) ATMEL	1FN41
U14	IC, SMT, USB to RS232, 28-SSOP	UX118	FT232RL(STATIC)(RoHS)	
U15	IC, SMT, SRAM, 32Kx8, SOIC-28(Wide)	UDMS01	CY62256LL-70SNI(STATIC)	65786
U16	IC,SMT,CMOS,Quad Tri-State Buffer, SOIC-14	UDLS06	MC74HC125AD(STATIC)	04713
U17	IC,SMT,CMOS,Quad Tri-State Buffer, SOIC-14	UDLS06	MC74HC125AD(STATIC)	04713
U18	IC,SMT,RS-232 Transceiver,3.3V,SO-16	UDTS05	ADM3202ARN(STATIC)	45496
U19	IC,SMT,Opamp,Quad,Rail-To-Rail,SOIC-14	ULAS02	TLV2374ID(STATIC)	01295
U20	IC,SMT,RS-232 Transceiver,3.3V,SO-16	UDTS05	ADM3202ARN(STATIC)	45496
U21	IC, SMT, CPLD, 10ns, Industrial Temp, VQFP-64	UW116	XC9572XL-10VQG64I(STATIC)(RoHS)	68994
U22	IC,SMT,Non-Volatile RAM Ctrlr,SOIC-8	UDSS01	DS1312S-2(STATIC)	0B0A9
U23	IC,SMT,DAC,8-Bit,4-ch,SPI,SOIC-14	UMDS01	TLV5620ID(STATIC)	64155
U24	IC,SMT,Comparator,Quad,SOIC-14	ULCS01	MC3302D(STATIC)	04713
U25	IC,SMT,2.5V Reference,0.1%,SOT-23-6	UX83	LT1790BIS6-2.5(STATIC)	64155
U26	IC,SMT,CMOS,Hex Schm,Trig,Inv,SOIC-14	UDLS03	SN74AHCT14D(STATIC)	01295
U27	Not Used	-	NOT USED	37338
U28	IC,SMT,CMOS,Hex Schm,Trig,Inv,SOIC-14	UDLS03	SN74AHCT14D(STATIC)	01295
U29	Not Used	-	NOT USED	37338
U30	Voltage Regulator, Adj Voltage, 3A	UT36	LM350T	27014
U31	IC, SMT, CMOS, Octal Latch,SOIC-20	UDLS02	SN74AHC573DW(STATIC)	01295
U32	IC, SMT, Wide Inout Buck Converter, SOIC8	UX125	TPS5430DDA(STATIC)(RoHS) Texas Instruments	01295
U33	Rect/Assy, Bridge, 200V, 4A	UT04	KBL02(STATIC)	89397
U34	Rect/Assy, Bridge, 200V, 4A	UT04	KBL02(STATIC)	89397
Y01	Crystal,SMT,Fund,Par Res,32.768kHz	XFPS02	MC20632.7680KA-A0	1JRT7

Exciter/Control PWB Assy-NOAA

REFDES	DESCRIPTION	NAUTEL #	VENDOR #	OEM CODE
C001	Cap, SMT, Ceramic,47uF,20%,6.3V, 1210	CCFS53	C3225X5R0J476M(RoHS)	56289
C002	Cap, SMT, Ceramic, 0.1uF, 10%25V X7R, 0603	CCFS52	C0603C104K3RAC	31433
C003	Cap,SMT,Ceramic,100pF,2%,50V,C0G,0603	CCFS32	C0603C101G5GAC	31433
C004	Cap, SMT, Ceramic, 0.1uF, 10%25V X7R, 0603	CCFS52	C0603C104K3RAC	31433
C005	Cap, SMT, Ceramic, 0.1uF, 10%25V X7R, 0603	CCFS52	C0603C104K3RAC	31433
C006	Cap, SMT, Ceramic, 0.1uF, 10%25V X7R, 0603	CCFS52	C0603C104K3RAC	31433
C007	Cap,SMT,Ceramic,100pF,2%,50V,C0G,0603	CCFS32	C0603C101G5GAC	31433
C008	Cap,SMT,Ceramic,100pF,2%,50V,C0G,0603	CCFS32	C0603C101G5GAC	31433
C009	Cap, SMT, Ceramic, 0.1uF, 10%25V X7R, 0603	CCFS52	C0603C104K3RAC	31433
C010	Cap,SMT,Ceramic,10uF,20%,6.3V,X5R,0805	CCFS57	C2012X5R0J106M	54583
C011	Cap, SMT, Ceramic,47uF,20%,6.3V, 1210	CCFS53	C3225X5R0J476M(RoHS)	56289
C012	Cap, SMT, Ceramic,47uF,20%,6.3V, 1210	CCFS53	C3225X5R0J476M(RoHS)	56289
C013	Cap, SMT, Ceramic, 0.1uF, 10%25V X7R, 0603	CCFS52	C0603C104K3RAC	31433
C014	Cap, SMT, Ceramic, 0.1uF, 10%25V X7R, 0603	CCFS52	C0603C104K3RAC	31433
C015	Cap, SMT, Ceramic, 0.1uF, 10%25V X7R, 0603	CCFS52	C0603C104K3RAC	31433
C016	Cap, SMT, Ceramic, 0.1uF, 10%25V X7R, 0603	CCFS52	C0603C104K3RAC	31433
C017	Cap,SMT,Ceramic,10uF,20%,6.3V,X5R,0805	CCFS57	C2012X5R0J106M	54583
C018	Cap, SMT, Ceramic, 0.1uF, 10%25V X7R, 0603	CCFS52	C0603C104K3RAC	31433
C019	Cap, SMT, Ceramic, 0.1uF, 10%25V X7R, 0603	CCFS52	C0603C104K3RAC	31433
C020	Cap, SMT, Ceramic, 0.1uF, 10%25V X7R, 0603	CCFS52	C0603C104K3RAC	31433
C021	Cap, SMT, Ceramic, 0.1uF, 10%25V X7R, 0603	CCFS52	C0603C104K3RAC	31433
C022	Cap,SMT,Ceramic,10uF,20%,6.3V,X5R,0805	CCFS57	C2012X5R0J106M	54583
C023	Cap,SMT,Ceramic,100pF,2%,50V,C0G,0603	CCFS32	C0603C101G5GAC	31433
C024	Cap, SMT, Ceramic, 0.1uF, 10%25V X7R, 0603	CCFS52	C0603C104K3RAC	31433
C025	Cap, SMT, Ceramic, 0.1uF, 10%25V X7R, 0603	CCFS52	C0603C104K3RAC	31433
C026	Cap,SMT,Ceramic,100pF,2%,50V,C0G,0603	CCFS32	C0603C101G5GAC	31433
C027	Cap,SMT,Ceramic,100pF,2%,50V,C0G,0603	CCFS32	C0603C101G5GAC	31433
C028	Cap, SMT, Ceramic, 0.1uF, 10%25V X7R, 0603	CCFS52	C0603C104K3RAC	31433
C029	Cap,SMT,Ceramic,10uF,20%,6.3V,X5R,0805	CCFS57	C2012X5R0J106M	54583
C030	Cap,SMT,Ceramic,0.001uF,10%,50V,X7R,0603	CCFS01	C0603C102K5RAC	31433
C031	Cap,SMT,Ceramic,10uF,20%,6.3V,X5R,0805	CCFS57	C2012X5R0J106M	54583
C032	Cap,SMT,Ceramic,1uF,10%,100V,X7R,1210	CCFS60	12101C105KAT2A(ROHS)	AVX CORP
C033	Cap,SMT,Ceramic,10uF,20%,6.3V,X5R,0805	CCFS57	C2012X5R0J106M	54583
C034	Cap,SMT,Ceramic,0.0022uF,10%,50V,X7R,0603	CCFS02	C0603C222K5RAC	31433
C035	Cap,SMT,Ceramic,0.001uF,10%,50V,X7R,0603	CCFS01	C0603C102K5RAC	31433
C036	Cap,SMT,Ceramic,0.01uF,10%,50V,X7R,0603	CCFS04	C0603C103K5RAC	31433
C037	Cap,SMT,Ceramic,0.001uF,10%,50V,X7R,0603	CCFS01	C0603C102K5RAC	31433

Continued from previous page

REFDES	DESCRIPTION	NAUTEL #	VENDOR #	OEM CODE
C038	Cap,SMT,Ceramic,100pF,2%,50V,C0G,0603	CCFS32	C0603C101G5GAC	31433
C039	Cap,SMT,Ceramic,100pF,2%,50V,C0G,0603	CCFS32	C0603C101G5GAC	31433
C040	Cap,SMT,Ceramic,0.001uF,10%,50V,X7R,0603	CCFS01	C0603C102K5RAC	31433
C041	Cap,SMT,Ceramic,0.001uF,10%,50V,X7R,0603	CCFS01	C0603C102K5RAC	31433
C042	Cap,SMT,Ceramic,0.001uF,10%,50V,X7R,0603	CCFS01	C0603C102K5RAC	31433
C043	Cap,SMT,Ceramic,0.001uF,10%,50V,X7R,0603	CCFS01	C0603C102K5RAC	31433
C044	Cap, SMT, Ceramic, 10uF, 10%,25V	CCFS62	C3225X5R1E106K	
C045	Cap,SMT,Ceramic,1000pF,2%,50V,C0G,0805	CCFS42	C0805C102G5GAC	31433
C046	Cap,SMT,Tantalum,10uF,10%,16V,1411	CTFS01	T494B106K016AS	31433
C047	Cap,SMT,Ceramic,1uF,10%,25V,,X7R,1206	CCFS10	C1206C105K3RAC	31433
C048	Cap, SMT, Ceramic, 0.1uF, 10%25V X7R, 0603	CCFS52	C0603C104K3RAC	31433
C049	Cap,SMT,Ceramic,0.001uF,10%,50V,X7R,0603	CCFS01	C0603C102K5RAC	31433
C050	Cap,SMT,Ceramic,0.001uF,10%,50V,X7R,0603	CCFS01	C0603C102K5RAC	31433
C051	Cap, SMT, Ceramic, 100pF, 1%,50V, C0G, 0805	CCFS63	C0805C101F5GAC(RoHS)	31433
C052	Not Used	-	NOT USED	37338
C053	Cap,SMT,Ceramic,100pF,2%,50V,C0G,0603	CCFS32	C0603C101G5GAC	31433
C054	Cap,SMT,Ceramic,100pF,2%,50V,C0G,0603	CCFS32	C0603C101G5GAC	31433
C055	Cap, SMT, Ceramic, 100pF, 1%,50V, C0G, 0805	CCFS63	C0805C101F5GAC(RoHS)	31433
C056	Cap, SMT, Ceramic, 180pF, 1%,50V, C0G, 0805	CCFS65	C0805C181F5GAC(RoHS)	31433
C057	Cap, SMT, Ceramic, 180pF, 1%,50V, C0G, 0805	CCFS65	C0805C181F5GAC(RoHS)	31433
C058	Not Used	-	NOT USED	37338
C059	Cap, SMT, Ceramic, 0.1uF, 10%25V X7R, 0603	CCFS52	C0603C104K3RAC	31433
C060	Cap,SMT,Ceramic,0.001uF,10%,50V,X7R,0603	CCFS01	C0603C102K5RAC	31433
C061	Cap,SMT,Ceramic,0.001uF,10%,50V,X7R,0603	CCFS01	C0603C102K5RAC	31433
C062	Cap, SMT, Ceramic, 100pF, 1%,50V, C0G, 0805	CCFS63	C0805C101F5GAC(RoHS)	31433
C063	Cap, SMT, Ceramic, 0.1uF, 10%25V X7R, 0603	CCFS52	C0603C104K3RAC	31433
C064	Cap,SMT,Ceramic,4.7uF,20%,10V,X5R,1206	CX33	C1206C475M8PAC	31433
C065	Cap,SMT,Ceramic,100pF,2%,50V,C0G,0603	CCFS32	C0603C101G5GAC	31433
C066	Cap,SMT,Ceramic,0.001uF,10%,50V,X7R,0603	CCFS01	C0603C102K5RAC	31433
C067	Cap,SMT,Ceramic,1000pF,2%,50V,C0G,0805	CCFS42	C0805C102G5GAC	31433
C068	Cap,SMT,Ceramic,10uF,20%,6.3V,X5R,0805	CCFS57	C2012X5R0J106M	54583
C069	Cap, SMT, Ceramic, 0.1uF, 10%25V X7R, 0603	CCFS52	C0603C104K3RAC	31433
C070	Cap,SMT,Ceramic,0.001uF,10%,50V,X7R,0603	CCFS01	C0603C102K5RAC	31433
C071	Cap,SMT,Ceramic,100pF,2%,50V,C0G,0603	CCFS32	C0603C101G5GAC	31433
C072	Cap,SMT,Ceramic,1000pF,2%,50V,C0G,0805	CCFS42	C0805C102G5GAC	31433
C073	Cap, SMT, Ceramic, 0.1uF, 10%25V X7R, 0603	CCFS52	C0603C104K3RAC	31433
C074	Cap, SMT, Ceramic, 0.1uF, 10%25V X7R, 0603	CCFS52	C0603C104K3RAC	31433

Continued from previous page

REFDES	DESCRIPTION	NAUTEL #	VENDOR #	OEM CODE
C075	Cap,SMT,Ceramic,0.001uF,10%,50V,X7R,0603	CCFS01	C0603C102K5RAC	31433
C076	Cap,SMT,Ceramic,0.001uF,10%,50V,X7R,0603	CCFS01	C0603C102K5RAC	31433
C077	Cap,SMT,Ceramic,0.001uF,10%,50V,X7R,0603	CCFS01	C0603C102K5RAC	31433
C078	Cap,SMT,Ceramic,0.01uF,10%,50V,X7R,0603	CCFS04	C0603C103K5RAC	31433
C079	Cap,SMT,Ceramic,0.001uF,10%,50V,X7R,0603	CCFS01	C0603C102K5RAC	31433
C080	Cap,SMT,Ceramic,1000pF,2%,50V,C0G,0805	CCFS42	C0805C102G5GAC	31433
C081	Cap, SMT, Ceramic, 0.1uF, 10%25V X7R, 0603	CCFS52	C0603C104K3RAC	31433
C082	Cap,SMT,Ceramic,0.001uF,10%,50V,X7R,0603	CCFS01	C0603C102K5RAC	31433
C083	Cap, SMT, Ceramic, 0.1uF, 10%25V X7R, 0603	CCFS52	C0603C104K3RAC	31433
C084	Cap, SMT, Ceramic, 0.1uF, 10%25V X7R, 0603	CCFS52	C0603C104K3RAC	31433
C085	Cap,SMT,Ceramic,0.001uF,10%,50V,X7R,0603	CCFS01	C0603C102K5RAC	31433
C086	Cap,SMT,Ceramic,0.001uF,10%,50V,X7R,0603	CCFS01	C0603C102K5RAC	31433
C087	Cap,SMT,Ceramic,0.001uF,10%,50V,X7R,0603	CCFS01	C0603C102K5RAC	31433
C088	Cap,SMT,Ceramic,0.001uF,10%,50V,X7R,0603	CCFS01	C0603C102K5RAC	31433
C089	Cap,SMT,Ceramic,0.001uF,10%,50V,X7R,0603	CCFS01	C0603C102K5RAC	31433
C090	Cap,SMT,Ceramic,0.001uF,10%,50V,X7R,0603	CCFS01	C0603C102K5RAC	31433
C091	Cap,SMT,Ceramic,0.001uF,10%,50V,X7R,0603	CCFS01	C0603C102K5RAC	31433
C092	Cap,SMT,Ceramic,0.001uF,10%,50V,X7R,0603	CCFS01	C0603C102K5RAC	31433
C093	Cap,SMT,Ceramic,0.001uF,10%,50V,X7R,0603	CCFS01	C0603C102K5RAC	31433
C094	Cap,SMT,Ceramic,0.001uF,10%,50V,X7R,0603	CCFS01	C0603C102K5RAC	31433
C095	Cap,SMT,Ceramic,0.001uF,10%,50V,X7R,0603	CCFS01	C0603C102K5RAC	31433
C096	Cap, SMT, Ceramic, 0.1uF, 10%25V X7R, 0603	CCFS52	C0603C104K3RAC	31433
C097	Cap, SMT, Ceramic, 0.1uF, 10%25V X7R, 0603	CCFS52	C0603C104K3RAC	31433
C098	Cap, SMT, Ceramic, 0.1uF, 10%25V X7R, 0603	CCFS52	C0603C104K3RAC	31433
C099	Cap, SMT, Ceramic, 0.1uF, 10%25V X7R, 0603	CCFS52	C0603C104K3RAC	31433
C100	Cap, SMT, Ceramic, 0.1uF, 10%25V X7R, 0603	CCFS52	C0603C104K3RAC	31433
C101	Cap, SMT, Ceramic, 0.1uF, 10%25V X7R, 0603	CCFS52	C0603C104K3RAC	31433
C102	Cap, SMT, Ceramic, 0.1uF, 10%25V X7R, 0603	CCFS52	C0603C104K3RAC	31433
C103	Cap, SMT, Ceramic, 0.1uF, 10%25V X7R, 0603	CCFS52	C0603C104K3RAC	31433
C104	Cap, SMT, Ceramic, 0.1uF, 10%25V X7R, 0603	CCFS52	C0603C104K3RAC	31433
C105	Cap, SMT, Ceramic, 0.1uF, 10%25V X7R, 0603	CCFS52	C0603C104K3RAC	31433
C106	Cap, SMT, Ceramic, 0.1uF, 10%25V X7R, 0603	CCFS52	C0603C104K3RAC	31433
C107	Cap, SMT, Ceramic, 0.1uF, 10%25V X7R, 0603	CCFS52	C0603C104K3RAC	31433
C108	Cap, SMT, Ceramic, 0.1uF, 10%25V X7R, 0603	CCFS52	C0603C104K3RAC	31433
C109	Cap, SMT, Ceramic, 0.1uF, 10%25V X7R, 0603	CCFS52	C0603C104K3RAC	31433
C110	Cap, SMT, Ceramic, 0.1uF, 10%25V X7R, 0603	CCFS52	C0603C104K3RAC	31433
C111	Cap, SMT, Ceramic, 0.1uF, 10%25V X7R, 0603	CCFS52	C0603C104K3RAC	31433
C112	Cap, SMT, Ceramic, 0.1uF, 10%25V X7R, 0603	CCFS52	C0603C104K3RAC	31433
C113	Cap, SMT, Ceramic, 0.1uF, 10%25V X7R, 0603	CCFS52	C0603C104K3RAC	31433

Continued from previous page

REFDES	DESCRIPTION	NAUTEL #	VENDOR #	OEM CODE
C114	Cap, SMT, Ceramic, 0.1uF, 10%25V X7R, 0603	CCFS52	C0603C104K3RAC	31433
C115	Cap, SMT, Ceramic, 0.1uF, 10%25V X7R, 0603	CCFS52	C0603C104K3RAC	31433
C116	Cap, SMT, Ceramic, 0.1uF, 10%25V X7R, 0603	CCFS52	C0603C104K3RAC	31433
C117	Cap, SMT, Ceramic, 0.1uF, 10%25V X7R, 0603	CCFS52	C0603C104K3RAC	31433
C118	Cap, SMT, Ceramic, 0.1uF, 10%25V X7R, 0603	CCFS52	C0603C104K3RAC	31433
C119	Cap, SMT, Ceramic, 0.1uF, 10%25V X7R, 0603	CCFS52	C0603C104K3RAC	31433
C120	Cap, SMT, Ceramic, 0.1uF, 10%25V X7R, 0603	CCFS52	C0603C104K3RAC	31433
C121	Cap, SMT, Ceramic, 0.1uF, 10%25V X7R, 0603	CCFS52	C0603C104K3RAC	31433
C122	Cap, SMT, Ceramic, 0.1uF, 10%25V X7R, 0603	CCFS52	C0603C104K3RAC	31433
C123	Cap, SMT, Ceramic, 0.1uF, 10%25V X7R, 0603	CCFS52	C0603C104K3RAC	31433
C124	Cap, SMT, Ceramic, 0.1uF, 10%25V X7R, 0603	CCFS52	C0603C104K3RAC	31433
C125	Cap, SMT, Ceramic, 0.1uF, 10%25V X7R, 0603	CCFS52	C0603C104K3RAC	31433
C126	Cap, SMT, Ceramic, 0.1uF, 10%25V X7R, 0603	CCFS52	C0603C104K3RAC	31433
C127	Cap, SMT, Ceramic, 0.1uF, 10%25V X7R, 0603	CCFS52	C0603C104K3RAC	31433
C128	Cap, SMT, Ceramic, 0.1uF, 10%25V X7R, 0603	CCFS52	C0603C104K3RAC	31433
C129	Cap, SMT, Ceramic, 0.1uF, 10%25V X7R, 0603	CCFS52	C0603C104K3RAC	31433
C130	Cap, SMT, Ceramic, 0.1uF, 10%25V X7R, 0603	CCFS52	C0603C104K3RAC	31433
C131	Cap, SMT, Ceramic, 0.1uF, 10%25V X7R, 0603	CCFS52	C0603C104K3RAC	31433
C132	Cap, SMT, Ceramic, 0.1uF, 10%25V X7R, 0603	CCFS52	C0603C104K3RAC	31433
C133	Cap, SMT, Ceramic, 0.1uF, 10%25V X7R, 0603	CCFS52	C0603C104K3RAC	31433
C134	Cap, SMT, Ceramic, 0.1uF, 10%25V X7R, 0603	CCFS52	C0603C104K3RAC	31433
C135	Cap, SMT, Ceramic, 0.1uF, 10%25V X7R, 0603	CCFS52	C0603C104K3RAC	31433
C136	Cap, SMT, Ceramic, 0.1uF, 10%25V X7R, 0603	CCFS52	C0603C104K3RAC	31433
C137	Cap, SMT, Ceramic, 0.1uF, 10%25V X7R, 0603	CCFS52	C0603C104K3RAC	31433
C138	Cap, SMT, Ceramic, 0.1uF, 10%25V X7R, 0603	CCFS52	C0603C104K3RAC	31433
C139	Cap, SMT, Ceramic, 0.1uF, 10%25V X7R, 0603	CCFS52	C0603C104K3RAC	31433
C140	Cap, SMT, Ceramic, 0.1uF, 10%25V X7R, 0603	CCFS52	C0603C104K3RAC	31433
C141	Cap, SMT, Ceramic, 0.1uF, 10%25V X7R, 0603	CCFS52	C0603C104K3RAC	31433
C142	Cap, SMT, Ceramic, 0.1uF, 10%25V X7R, 0603	CCFS52	C0603C104K3RAC	31433
C143	Cap, SMT, Ceramic, 0.1uF, 10%25V X7R, 0603	CCFS52	C0603C104K3RAC	31433
C144	Cap, SMT, Ceramic, 0.1uF, 10%25V X7R, 0603	CCFS52	C0603C104K3RAC	31433
C145	Cap, SMT, Ceramic, 0.1uF, 10%25V X7R, 0603	CCFS52	C0603C104K3RAC	31433
C146	Cap, SMT, Ceramic, 0.1uF, 10%25V X7R, 0603	CCFS52	C0603C104K3RAC	31433
C147	Cap, SMT, Ceramic, 0.1uF, 10%25V X7R, 0603	CCFS52	C0603C104K3RAC	31433
C148	Cap, SMT, Ceramic, 0.1uF, 10%25V X7R, 0603	CCFS52	C0603C104K3RAC	31433
C149	Cap, SMT, Ceramic, 0.1uF, 10%25V X7R, 0603	CCFS52	C0603C104K3RAC	31433
C150	Cap, SMT, Ceramic, 0.1uF, 10%25V X7R, 0603	CCFS52	C0603C104K3RAC	31433
C151	Cap, SMT, Ceramic, 0.1uF, 10%25V X7R, 0603	CCFS52	C0603C104K3RAC	31433
C152	Cap, SMT, Ceramic, 0.1uF, 10%25V X7R, 0603	CCFS52	C0603C104K3RAC	31433

Continued from previous page

REFDES	DESCRIPTION	NAUTEL #	VENDOR #	OEM CODE
C153	Cap, SMT, Ceramic, 0.1uF, 10%25V X7R, 0603	CCFS52	C0603C104K3RAC	31433
C154	Cap, SMT, Ceramic, 0.1uF, 10%25V X7R, 0603	CCFS52	C0603C104K3RAC	31433
C155	Cap, SMT, Ceramic, 0.1uF, 10%25V X7R, 0603	CCFS52	C0603C104K3RAC	31433
C156	Cap, SMT, Ceramic, 0.1uF, 10%25V X7R, 0603	CCFS52	C0603C104K3RAC	31433
C157	Cap, SMT, Ceramic, 0.1uF, 10%25V X7R, 0603	CCFS52	C0603C104K3RAC	31433
C158	Cap, SMT, Ceramic, 0.1uF, 10%25V X7R, 0603	CCFS52	C0603C104K3RAC	31433
C159	Cap, SMT, Ceramic, 0.1uF, 10%25V X7R, 0603	CCFS52	C0603C104K3RAC	31433
C160	Cap, SMT, Ceramic, 0.1uF, 10%25V X7R, 0603	CCFS52	C0603C104K3RAC	31433
C161	Cap, SMT, Ceramic, 0.1uF, 10%25V X7R, 0603	CCFS52	C0603C104K3RAC	31433
C162	Cap, SMT, Ceramic, 0.1uF, 10%25V X7R, 0603	CCFS52	C0603C104K3RAC	31433
C163	Cap, SMT, Ceramic, 0.1uF, 10%25V X7R, 0603	CCFS52	C0603C104K3RAC	31433
C164	Cap, SMT, Ceramic, 0.1uF, 10%25V X7R, 0603	CCFS52	C0603C104K3RAC	31433
C165	Cap, SMT, Ceramic, 0.1uF, 10%25V X7R, 0603	CCFS52	C0603C104K3RAC	31433
C166	Cap, SMT, Ceramic, 0.1uF, 10%25V X7R, 0603	CCFS52	C0603C104K3RAC	31433
C167	Cap, SMT, Ceramic, 0.1uF, 10%25V X7R, 0603	CCFS52	C0603C104K3RAC	31433
C168	Cap, SMT, Ceramic, 0.1uF, 10%25V X7R, 0603	CCFS52	C0603C104K3RAC	31433
C169	Cap, SMT, Ceramic, 0.1uF, 10%25V X7R, 0603	CCFS52	C0603C104K3RAC	31433
C170	Cap, SMT, Ceramic,47uF,20%,6.3V, 1210	CCFS53	C3225X5R0J476M(RoHS)	56289
C171	Cap, SMT, Ceramic,47uF,20%,6.3V, 1210	CCFS53	C3225X5R0J476M(RoHS)	56289
C172	Cap, SMT, Ceramic, 0.1uF, 10%25V X7R, 0603	CCFS52	C0603C104K3RAC	31433
C173	Cap, SMT, Ceramic, 0.1uF, 10%25V X7R, 0603	CCFS52	C0603C104K3RAC	31433
C174	Cap, SMT, Ceramic, 0.1uF, 10%25V X7R, 0603	CCFS52	C0603C104K3RAC	31433
C175	Cap, SMT, Ceramic, 0.1uF, 10%25V X7R, 0603	CCFS52	C0603C104K3RAC	31433
C176	Cap, SMT, Ceramic, 0.1uF, 10%25V X7R, 0603	CCFS52	C0603C104K3RAC	31433
C177	Cap, SMT, Ceramic, 0.1uF, 10%25V X7R, 0603	CCFS52	C0603C104K3RAC	31433
C178	Cap, SMT, Ceramic, 0.1uF, 10%25V X7R, 0603	CCFS52	C0603C104K3RAC	31433
C179	Cap, SMT, Ceramic, 0.1uF, 10%25V X7R, 0603	CCFS52	C0603C104K3RAC	31433
C180	Cap, SMT, Ceramic, 0.1uF, 10%25V X7R, 0603	CCFS52	C0603C104K3RAC	31433
C181	Cap, SMT, Ceramic, 0.1uF, 10%25V X7R, 0603	CCFS52	C0603C104K3RAC	31433
C182	Cap, SMT, Ceramic, 0.1uF, 10%25V X7R, 0603	CCFS52	C0603C104K3RAC	31433
C183	Cap, SMT, Ceramic, 0.1uF, 10%25V X7R, 0603	CCFS52	C0603C104K3RAC	31433
C184	Cap, SMT, Ceramic, 0.1uF, 10%25V X7R, 0603	CCFS52	C0603C104K3RAC	31433
C185	Cap, SMT, Ceramic, 0.1uF, 10%25V X7R, 0603	CCFS52	C0603C104K3RAC	31433
C186	Cap, SMT, Ceramic, 0.1uF, 10%25V X7R, 0603	CCFS52	C0603C104K3RAC	31433
C187	Cap, SMT, Ceramic, 0.1uF, 10%25V X7R, 0603	CCFS52	C0603C104K3RAC	31433
C188	Cap, SMT, Ceramic, 0.1uF, 10%25V X7R, 0603	CCFS52	C0603C104K3RAC	31433
C189	Cap, SMT, Ceramic, 0.1uF, 10%25V X7R, 0603	CCFS52	C0603C104K3RAC	31433
C190	Cap, SMT, Ceramic, 0.1uF, 10%25V X7R, 0603	CCFS52	C0603C104K3RAC	31433

Continued from previous page

REFDES	DESCRIPTION	NAUTEL #	VENDOR #	OEM CODE
C191	Cap, SMT, Ceramic, 0.1uF, 10%25V X7R, 0603	CCFS52	C0603C104K3RAC	31433
C192	Cap, SMT, Ceramic, 0.1uF, 10%25V X7R, 0603	CCFS52	C0603C104K3RAC	31433
C193	Cap, SMT, Ceramic, 0.1uF, 10%25V X7R, 0603	CCFS52	C0603C104K3RAC	31433
C194	Cap, SMT, Ceramic, 0.1uF, 10%25V X7R, 0603	CCFS52	C0603C104K3RAC	31433
C195	Cap, SMT, Ceramic, 10uF, 10%,25V	CCFS62	C3225X5R1E106K	
C196	Cap, SMT, Ceramic, 10uF, 10%,25V	CCFS62	C3225X5R1E106K	
C197	Cap, SMT, Ceramic, 0.1uF, 10%25V X7R, 0603	CCFS52	C0603C104K3RAC	31433
C198	Cap, SMT, Ceramic, 0.1uF, 10%25V X7R, 0603	CCFS52	C0603C104K3RAC	31433
C199	Cap, SMT, Ceramic, 0.1uF, 10%25V X7R, 0603	CCFS52	C0603C104K3RAC	31433
C200	Cap, SMT, Ceramic, 0.1uF, 10%25V X7R, 0603	CCFS52	C0603C104K3RAC	31433
C201	Cap, SMT, Ceramic, 0.1uF, 10%25V X7R, 0603	CCFS52	C0603C104K3RAC	31433
C202	Cap, SMT, Ceramic, 0.1uF, 10%25V X7R, 0603	CCFS52	C0603C104K3RAC	31433
C203	Cap, SMT, Ceramic, 0.1uF, 10%25V X7R, 0603	CCFS52	C0603C104K3RAC	31433
C204	Cap, SMT, Ceramic, 0.1uF, 10%25V X7R, 0603	CCFS52	C0603C104K3RAC	31433
C205	Cap, SMT, Ceramic, 0.1uF, 10%25V X7R, 0603	CCFS52	C0603C104K3RAC	31433
C206	Cap, SMT, Ceramic, 0.1uF, 10%25V X7R, 0603	CCFS52	C0603C104K3RAC	31433
C207	Cap, SMT, Ceramic, 0.1uF, 10%25V X7R, 0603	CCFS52	C0603C104K3RAC	31433
C208	Cap, SMT, Ceramic, 0.1uF, 10%25V X7R, 0603	CCFS52	C0603C104K3RAC	31433
C209	Cap, SMT, Ceramic, 0.1uF, 10%25V X7R, 0603	CCFS52	C0603C104K3RAC	31433
C210	Cap, SMT, Ceramic, 10uF, 10%,25V	CCFS62	C3225X5R1E106K	
C211	Cap, SMT, Ceramic, 10uF, 10%,25V	CCFS62	C3225X5R1E106K	
C212	Cap, SMT, Ceramic, 0.1uF, 10%25V X7R, 0603	CCFS52	C0603C104K3RAC	31433
C213	Cap, SMT, Ceramic, 0.1uF, 10%25V X7R, 0603	CCFS52	C0603C104K3RAC	31433
C214	Cap, SMT, Ceramic, 0.1uF, 10%25V X7R, 0603	CCFS52	C0603C104K3RAC	31433
C215	Cap, SMT, Ceramic, 0.1uF, 10%25V X7R, 0603	CCFS52	C0603C104K3RAC	31433
C216	Cap, SMT, Ceramic, 0.1uF, 10%25V X7R, 0603	CCFS52	C0603C104K3RAC	31433
C217	Cap, SMT, Ceramic, 0.1uF, 10%25V X7R, 0603	CCFS52	C0603C104K3RAC	31433
C218	Cap, SMT, Ceramic, 0.1uF, 10%25V X7R, 0603	CCFS52	C0603C104K3RAC	31433
C219	Cap, SMT, Ceramic, 0.1uF, 10%25V X7R, 0603	CCFS52	C0603C104K3RAC	31433
C220	Cap, SMT, Ceramic, 0.1uF, 10%25V X7R, 0603	CCFS52	C0603C104K3RAC	31433
C221	Cap, SMT, Ceramic, 0.1uF, 10%25V X7R, 0603	CCFS52	C0603C104K3RAC	31433
CR01	Diode,SMT,Transient Suppr,10V,SMB	QM48	1SMB10CAT3	04713
CR02	Diode,SMT,Transient Suppr,10V,SMB	QM48	1SMB10CAT3	04713
CR03	Diode, SMT, Schottky, 40V, 1A, SMA	QDDS02	STPS140A(RoHS)	
CR04	Diode,SMT,Switching,250V,0.2A,SOD-323	QDRS01	BAS21HT1(STATIC)	04713
CR05	Diode,SMT,Switching,250V,0.2A,SOD-323	QDRS01	BAS21HT1(STATIC)	04713
CR06	Diode,SMT,Switching,250V,0.2A,SOD-323	QDRS01	BAS21HT1(STATIC)	04713
CR07	Diode,SMT,Switching,250V,0.2A,SOD-323	QDRS01	BAS21HT1(STATIC)	04713
CR08	Diode, SMT, Schottky, 40V, 1A, SMA	QDDS02	STPS140A(RoHS)	

Continued from previous page

REFDES	DESCRIPTION	NAUTEL #	VENDOR #	OEM CODE
CR09	Diode,SMT,Switching,250V,0.2A,SOD-323	QDRS01	BAS21HT1(STATIC)	04713
CR10	Diode,SMT,Switching,250V,0.2A,SOD-323	QDRS01	BAS21HT1(STATIC)	04713
CR11	Diode,SMT,Switching,250V,0.2A,SOD-323	QDRS01	BAS21HT1(STATIC)	04713
CR12	Diode,SMT,Switching,250V,0.2A,SOD-323	QDRS01	BAS21HT1(STATIC)	04713
CR13	Diode,SMT,Switching,250V,0.2A,SOD-323	QDRS01	BAS21HT1(STATIC)	04713
CR14	Diode,SMT,Switching,250V,0.2A,SOD-323	QDRS01	BAS21HT1(STATIC)	04713
DS01	Diode, SMT, LED, Green,(560nm), 0603	QDLS01	597-5312-402F(STATIC)(RoHS)	83330
DS02	Diode, SMT, LED, Green,(560nm), 0603	QDLS01	597-5312-402F(STATIC)(RoHS)	83330
DS03	Diode, SMT, LED, Green,(560nm), 0603	QDLS01	597-5312-402F(STATIC)(RoHS)	83330
E01	Conn, Post Shunt, 2 Pos, .10 Centreline	JQ15	390088-2	09482
E02	Conn, Post Shunt, 2 Pos, .10 Centreline	JQ15	390088-2	09482
E03	Conn, Post Shunt, 2 Pos, .10 Centreline	JQ15	390088-2	09482
J01	Conn, Socket, D-Sub, 9 pin, PWB Mt	JQ34	K22-E9S-NJ	KYCON
J02	Conn, Plug, D-Sub, 9 pin, PWBMt	JQ33	K22-E9P-NJ	31781
J03	Conn, BNC, Recept, Rt Angle, PWB Mt	JS21	R141665161	0GP12
J04	Conn, Header, 3-pos, PWB mount 90 deg	JR59	PHP03-5.00	
J05	Conn, Header, 3-pos, PWB mount 90 deg	JR59	PHP03-5.00	
J06	Conn, Header, 3-pos, PWB mount 90 deg	JR59	PHP03-5.00	
J07	Conn, Header, Ribbon Cbl, 20Pin	JQ55	103308-5	00779
J08	Conn, Header, Ribbon Cbl, 20Pin	JQ55	103308-5	00779
J09	Conn, Header, Ribbon Cbl, 10-Pin	JQ54	103308-1	00779
J10	Conn, BNC, Recept, Rt Angle, PWB Mt	JS21	R141665161	0GP12
J11	Conn, Header, Ribbon Cbl, 40-Pin	JQ53	103308-8	00779
J12	Conn, Header,Square Post,Gold,Dual,40-pin	JF47	4-102973-0	09482
J13	Conn, Header,Square Post,Gold,Dual,40-pin	JF47	4-102973-0	09482
J14	Conn, Header, SIP,12 Pin Breakaway,.10 Ctr	JQ16	1-103185-2	09482
L01	Inductor, SMT, Choke, 600ohms,2A, 0805	LCFS01	ILHB0805RK601V	56845
L02	Inductor,SMT,560nH,325mA,2520	LS20	NLV25T-R56J-PF(ROHS)	TDK
L03	Inductor, SMT, Choke, 600ohms,2A, 0805	LCFS01	ILHB0805RK601V	56845
L04	Inductor, SMT, Choke, 600ohms,2A, 0805	LCFS01	ILHB0805RK601V	56845
L05	Inductor,SMT,560nH,325mA,2520	LS20	NLV25T-R56J-PF(ROHS)	TDK
L06	Inductor,SMT,560nH,325mA,2520	LS20	NLV25T-R56J-PF(ROHS)	TDK
L07	Inductor, SMT, 10uH, 2.4A, RMS	LS24	DRQ74-100-R(RoHS)	005K5
L08	Inductor, SMT, Choke, 600ohms,2A, 0805	LCFS01	ILHB0805RK601V	56845
L09	Inductor, SMT, Choke, 600ohms,2A, 0805	LCFS01	ILHB0805RK601V	56845
L10	Not Used	-	NOT USED	37338

Continued from previous page

Exciter/Control PWB Assy-NOAA

REFDES	DESCRIPTION	NAUTEL #	VENDOR #	OEM CODE
L11	Inductor, SMT, 16nH, 2%, 0805	LS30	0805HQ-16NXGLC(RoHS)	02133
L12	Inductor,SMT,560nH,325mA,2520	LS20	NLV25T-R56J-PF(ROHS)	TDK
L13	Inductor, SMT, Choke, 600ohms,2A, 0805	LCFS01	ILHB0805RK601V	56845
L14	Inductor, SMT, Choke, 600ohms,2A, 0805	LCFS01	ILHB0805RK601V	56845
L15	Inductor, SMT, Choke, 600ohms,2A, 0805	LCFS01	ILHB0805RK601V	56845
L16	Inductor, SMT, Choke, 600ohms,2A, 0805	LCFS01	ILHB0805RK601V	56845
L17	Inductor, SMT, Choke, 600ohms,2A, 0805	LCFS01	ILHB0805RK601V	56845
L18	Inductor, SMT, Choke, 600ohms,2A, 0805	LCFS01	ILHB0805RK601V	56845
Q01	Transistor,SMT,NPN,Switch/Amp,SOT-23	QBNS01	MMBT4401LT1(STATIC)	04713
Q02	Transistor,SMT,NPN,Switch/Amp,SOT-23	QBNS01	MMBT4401LT1(STATIC)	04713
R001	Resistor,SMT,MF,10.0Kohms,1%,1/10W,0603	RFFS50	RK73H1JLTD1002F	59124
R002	Resistor,SMT,MF,10.0Kohms,1%,1/10W,0603	RFFS50	RK73H1JLTD1002F	59124
R003	Resistor,SMT,MF,10.0Kohms,1%,1/10W,0603	RFFS50	RK73H1JLTD1002F	59124
R004	Resistor,SMT,MF,5620ohms,1%,1/10W,0603	RFFS47	RK73H1JLTD5621F	59124
R005	Resistor, SMT, MF, 10.0K Ohms, 1%, 1/4W	RAD37	RK73H2BL1002F	59124
R006	Resistor, SMT, MF, 1210 Ohms,1% 1/4W	RAD26	RK73H2BL1211F	59124
R007	Resistor, SMT, MF, 1210 Ohms,1% 1/4W	RAD26	RK73H2BL1211F	59124
R008	Resistor,SMT,MF,1000ohms,1%,1/10W,0603	RFFS38	RK73H1JLTD1001F	59124
R009	Resistor,SMT,MF,5620ohms,1%,1/10W,0603	RFFS47	RK73H1JLTD5621F	59124
R010	Resistor,SMT,MF,10.0Kohms,1%,1/10W,0603	RFFS50	RK73H1JLTD1002F	59124
R011	Resistor,SMT,MF,1000ohms,1%,1/10W,0603	RFFS38	RK73H1JLTD1001F	59124
R012	Resistor,SMT,MF,100ohms,1%,1/10W,0603	RFFS26	RK73H1JLTD1000F	59124
R013	Resistor,SMT,MF,221Kohms,1%,1/10W,0603	RFFS66	RK73H1JLTD2213F	59124
R014	Resistor,SMT,MF,56.2Kohms,1%,1/10W,0603	RFFS59	RK73H1JLTD5622F	59124
R015	Resistor, SMT, MF, 10.0K Ohms, 1%, 1/4W	RAD37	RK73H2BL1002F	59124
R016	Resistor,SMT,MF,1000ohms,1%,1/10W,0603	RFFS38	RK73H1JLTD1001F	59124
R017	Resistor,SMT,MF,1000ohms,1%,1/10W,0603	RFFS38	RK73H1JLTD1001F	59124
R018	Resistor,SMT,MF,1000ohms,1%,1/10W,0603	RFFS38	RK73H1JLTD1001F	59124
R019	Resistor, SMT, MF, 10.0K Ohms, 1%, 1/4W	RAD37	RK73H2BL1002F	59124
R020	Resistor, SMT, MF, 1210 Ohms,1% 1/4W	RAD26	RK73H2BL1211F	59124
R021	Resistor, SMT, MF, 1210 Ohms,1% 1/4W	RAD26	RK73H2BL1211F	59124
R022	Resistor,SMT,MF,1000ohms,1%,1/10W,0603	RFFS38	RK73H1JLTD1001F	59124
R023	Resistor,SMT,MF,5620ohms,1%,1/10W,0603	RFFS47	RK73H1JLTD5621F	59124
R024	Resistor,SMT,MF,22.1ohms,1%,1/10W,0603	RFFS18	RK73H1JLTD22R1F	59124
R025	Resistor,SMT,MF,1000ohms,1%,1/10W,0603	RFFS38	RK73H1JLTD1001F	59124
R026	Resistor,SMT,MF,5620ohms,1%,1/10W,0603	RFFS47	RK73H1JLTD5621F	59124
R027	Resistor,SMT,MF,1000ohms,1%,1/10W,0603	RFFS38	RK73H1JLTD1001F	59124

Continued from previous page

Exciter/Control PWB Assy-NOAA

REFDES	DESCRIPTION	NAUTEL #	VENDOR #	OEM CODE
R028	Resistor,SMT,MF,10.0Kohms,1%,1/10W,0603	RFFS50	RK73H1JLTD1002F	59124
R029	Resistor, SMT, MF, 10.0K Ohms, 1%, 1/4W	RAD37	RK73H2BL1002F	59124
R030	Resistor,SMT,MF,1000ohms,1%,1/10W,0603	RFFS38	RK73H1JLTD1001F	59124
R031	Resistor,SMT,MF,1000ohms,1%,1/10W,0603	RFFS38	RK73H1JLTD1001F	59124
R032	Resistor,SMT,MF,1000ohms,1%,1/10W,0603	RFFS38	RK73H1JLTD1001F	59124
R033	Resistor,SMT,MF,100ohms,1%,1/10W,0603	RFFS26	RK73H1JLTD1000F	59124
R034	Resistor,SMT,MF,10.0Kohms,1%,1/10W,0603	RFFS50	RK73H1JLTD1002F	59124
R035	Resistor,SMT,MF,1000ohms,1%,1/10W,0603	RFFS38	RK73H1JLTD1001F	59124
R036	Resistor,SMT,MF,1000ohms,1%,1/10W,0603	RFFS38	RK73H1JLTD1001F	59124
R037	Resistor,SMT,MF,10.0Kohms,1%,1/10W,0603	RFFS50	RK73H1JLTD1002F	59124
R038	Resistor,SMT,MF,10.0Kohms,1%,1/10W,0603	RFFS50	RK73H1JLTD1002F	59124
R039	Resistor,SMT,MF,10.0Kohms,1%,1/10W,0603	RFFS50	RK73H1JLTD1002F	59124
R040	Resistor,SMT,MF,10.0Kohms,1%,1/10W,0603	RFFS50	RK73H1JLTD1002F	59124
R041	Resistor,SMT,MF,10.0Kohms,1%,1/10W,0603	RFFS50	RK73H1JLTD1002F	59124
R042	Resistor,SMT,MF,10.0Kohms,1%,1/10W,0603	RFFS50	RK73H1JLTD1002F	59124
R043	Resistor,SMT,MF,475ohms,1%,1/10W,0603	RFFS34	RK73H1JLTD4750F	59124
R044	Resistor,SMT,MF,1000ohms,1%,1/10W,0603	RFFS38	RK73H1JLTD1001F	59124
R045	Resistor,SMT,MF,10.0Kohms,1%,1/10W,0603	RFFS50	RK73H1JLTD1002F	59124
R046	Resistor,SMT,MF,10.0Kohms,1%,1/10W,0603	RFFS50	RK73H1JLTD1002F	59124
R047	Resistor,SMT,MF,182Kohms,1%,1/10W,0603	RFFS65	RK73H1JLTD1823F	59124
R048	Resistor,SMT,MF,22.1ohms,1%,1/10W,0603	RFFS18	RK73H1JLTD22R1F	59124
R049	Resistor,SMT,MF,22.1Kohms,1%,1/10W,0603	RFFS54	RK73H1JLTD2212F	59124
R050	Resistor,SMT,MF,10.0Kohms,1%,1/10W,0603	RFFS50	RK73H1JLTD1002F	59124
R051	Resistor,SMT,MF,825ohms,1%,1/10W,0603	RFFS37	RK73H1JLTD8250F	59124
R052	Resistor,SMT,MF,475ohms,1%,1/10W,0603	RFFS34	RK73H1JLTD4750F	59124
R053	Resistor,SMT,MF,332ohms,1%,1/10W,0603	RFFS32	RK73H1JLTD3320F	59124
R054	Resistor,SMT,MF,4750ohms,1%,1/10W,0603	RFFS46	RK73H1JLTD4751F	59124
R055	Resistor,SMT,MF,332ohms,1%,1/10W,0603	RFFS32	RK73H1JLTD3320F	59124
R056	Resistor,SMT,MF,332ohms,1%,1/10W,0603	RFFS32	RK73H1JLTD3320F	59124
R057	Resistor,SMT,MF,100Kohms,1%,1/10W,0603	RFFS62	RK73H1JLTD1003F	59124
R058	Resistor,SMT,MF,100Kohms,1%,1/10W,0603	RFFS62	RK73H1JLTD1003F	59124
R059	Resistor,SMT,MF,56.2Kohms,1%,1/10W,0603	RFFS59	RK73H1JLTD5622F	59124
R060	Resistor,SMT,MF,332ohms,1%,1/10W,0603	RFFS32	RK73H1JLTD3320F	59124
R061	Resistor,SMT,MF,332ohms,1%,1/10W,0603	RFFS32	RK73H1JLTD3320F	59124
R062	Resistor,SMT,MF,10.0Kohms,1%,1/10W,0603	RFFS50	RK73H1JLTD1002F	59124
R063	Resistor,SMT,MF,10.0Kohms,1%,1/10W,0603	RFFS50	RK73H1JLTD1002F	59124
R064	Resistor,SMT,MF,10.0Kohms,1%,1/10W,0603	RFFS50	RK73H1JLTD1002F	59124
R065	Resistor,SMT,MF,10.0Kohms,1%,1/10W,0603	RFFS50	RK73H1JLTD1002F	59124
R066	Resistor,SMT,MF,10.0Kohms,1%,1/10W,0603	RFFS50	RK73H1JLTD1002F	59124

Continued from previous page

Exciter/Control PWB Assy-NOAA

REFDES	DESCRIPTION	NAUTEL #	VENDOR #	OEM CODE
R067	Resistor,SMT,MF,10.0Kohms,1%,1/10W,0603	RFFS50	RK73H1JLTD1002F	59124
R068	Resistor,SMT,MF,332ohms,1%,1/10W,0603	RFFS32	RK73H1JLTD3320F	59124
R069	Resistor,SMT,MF,332ohms,1%,1/10W,0603	RFFS32	RK73H1JLTD3320F	59124
R070	Resistor,SMT,MF,10.0Kohms,1%,1/10W,0603	RFFS50	RK73H1JLTD1002F	59124
R071	Resistor,SMT,MF,10.0Kohms,1%,1/10W,0603	RFFS50	RK73H1JLTD1002F	59124
R072	Resistor,SMT,MF,10.0Kohms,1%,1/10W,0603	RFFS50	RK73H1JLTD1002F	59124
R073	Resistor,SMT,MF,10.0Kohms,1%,1/10W,0603	RFFS50	RK73H1JLTD1002F	59124
R074	Resistor,SMT,MF,10.0Kohms,1%,1/10W,0603	RFFS50	RK73H1JLTD1002F	59124
R075	Resistor,SMT,MF,332ohms,1%,1/10W,0603	RFFS32	RK73H1JLTD3320F	59124
R076	Resistor, SMT, 25.5 ohms, 1%, 2512	RAD57	RK73H3ALTE25R5F	59124
R077	Resistor,SMT,MF,22.1ohms,1%,1/10W,0603	RFFS18	RK73H1JLTD22R1F	59124
R078	Resistor,SMT,MF,22.1ohms,1%,1/10W,0603	RFFS18	RK73H1JLTD22R1F	59124
R079	Resistor,SMT,MF,22.1ohms,1%,1/10W,0603	RFFS18	RK73H1JLTD22R1F	59124
R080	Resistor,SMT,MF,100ohms,1%,1/10W,0603	RFFS26	RK73H1JLTD1000F	59124
R081	Resistor,SMT,MF,4750ohms,1%,1/10W,0603	RFFS46	RK73H1JLTD4751F	59124
R082	Resistor,SMT,MF,100ohms,1%,1/10W,0603	RFFS26	RK73H1JLTD1000F	59124
R083	Resistor,SMT,MF,1000ohms,1%,1/10W,0603	RFFS38	RK73H1JLTD1001F	59124
R084	Resistor, SMT, 25.5 ohms, 1%, 2512	RAD57	RK73H3ALTE25R5F	59124
R085	Resistor,SMT,MF,10.0Kohms,1%,1/10W,0603	RFFS50	RK73H1JLTD1002F	59124
R086	Resistor,SMT,MF,1000ohms,1%,1/10W,0603	RFFS38	RK73H1JLTD1001F	59124
R087	Resistor,SMT,MF,1000ohms,1%,1/10W,0603	RFFS38	RK73H1JLTD1001F	59124
R088	Resistor, SMT, 200ohm, 1%,1/10W, 0603	RFFS87	RK73H1JLTD2000F	59124
R089	Resistor,SMT,MF,10.0Kohms,1%,1/10W,0603	RFFS50	RK73H1JLTD1002F	59124
R090	Resistor,SMT,MF,10.0Kohms,1%,1/10W,0603	RFFS50	RK73H1JLTD1002F	59124
R091	Resistor, SMT, 200ohm, 1%,1/10W, 0603	RFFS87	RK73H1JLTD2000F	59124
R092	Resistor,SMT,MF,1000ohms,1%,1/10W,0603	RFFS38	RK73H1JLTD1001F	59124
R093	Resistor,SMT,MF,4750ohms,1%,1/10W,0603	RFFS46	RK73H1JLTD4751F	59124
R094	Resistor,SMT,MF,4750ohms,1%,1/10W,0603	RFFS46	RK73H1JLTD4751F	59124
R095	Resistor, SMT, 200ohm, 1%,1/10W, 0603	RFFS87	RK73H1JLTD2000F	59124
R096	Resistor, SMT, 200ohm, 1%,1/10W, 0603	RFFS87	RK73H1JLTD2000F	59124
R097	Resistor,SMT,MF,100ohms,1%,1/10W,0603	RFFS26	RK73H1JLTD1000F	59124
R098	Resistor,SMT,MF,100ohms,1%,1/10W,0603	RFFS26	RK73H1JLTD1000F	59124
R099	Not Used	-	NOT USED	37338
R100	Resistor,SMT,MF,22.1ohms,1%,1/10W,0603	RFFS18	RK73H1JLTD22R1F	59124
R101	Resistor,SMT,MF,0.0ohms,Jumper,0603	RFFS01	RK73Z1JLTD	59124
R102	Resistor,SMT,MF,10.0Kohms,1%,1/10W,0603	RFFS50	RK73H1JLTD1002F	59124
R103	Resistor,SMT,MF,100Kohms,1%,1/10W,0603	RFFS62	RK73H1JLTD1003F	59124
R104	Resistor,SMT,MF,1000ohms,1%,1/10W,0603	RFFS38	RK73H1JLTD1001F	59124
R105	Resistor,SMT,MF,10.0Kohms,1%,1/10W,0603	RFFS50	RK73H1JLTD1002F	59124

Continued from previous page

REFDES	DESCRIPTION	NAUTEL #	VENDOR #	OEM CODE
R106	Resistor,SMT,MF,1000ohms,1%,1/10W,0603	RFFS38	RK73H1JLTD1001F	59124
R107	Resistor,SMT,MF,1000ohms,1%,1/10W,0603	RFFS38	RK73H1JLTD1001F	59124
R108	Resistor,SMT,MF,2210ohms,1%,1/10W,0603	RFFS42	RK73H1JLTD2211F	59124
R109	Resistor,SMT,MF,47.5Kohms,1%,1/10W,0603	RFFS58	RK73H1JLTD4752F	59124
R110	Resistor,SMT,MF,47.5Kohms,1%,1/10W,0603	RFFS58	RK73H1JLTD4752F	59124
R111	Resistor,SMT,MF,10.0Kohms,1%,1/10W,0603	RFFS50	RK73H1JLTD1002F	59124
R112	Resistor,SMT,MF,1000ohms,1%,1/10W,0603	RFFS38	RK73H1JLTD1001F	59124
R113	Resistor,SMT,MF,10.0Kohms,1%,1/10W,0603	RFFS50	RK73H1JLTD1002F	59124
R114	Resistor,SMT,MF,0.0ohms,Jumper,0603	RFFS01	RK73Z1JLTD	59124
R115	Not Used	-	NOT USED	37338
R116	Resistor,SMT,MF,10.0Kohms,1%,1/10W,0603	RFFS50	RK73H1JLTD1002F	59124
R117	Resistor,SMT,MF,10.0Kohms,1%,1/10W,0603	RFFS50	RK73H1JLTD1002F	59124
R118	Resistor,SMT,MF,100Kohms,1%,1/10W,0603	RFFS62	RK73H1JLTD1003F	59124
R119	Resistor,SMT,MF,1000ohms,1%,1/10W,0603	RFFS38	RK73H1JLTD1001F	59124
R120	Resistor,SMT,MF,2210ohms,1%,1/10W,0603	RFFS42	RK73H1JLTD2211F	59124
R121	Resistor,SMT,MF,4750ohms,1%,1/10W,0603	RFFS46	RK73H1JLTD4751F	59124
R122	Resistor,SMT,MF,1000ohms,1%,1/10W,0603	RFFS38	RK73H1JLTD1001F	59124
R123	Resistor,SMT,MF,1000ohms,1%,1/10W,0603	RFFS38	RK73H1JLTD1001F	59124
R124	Resistor,SMT,MF,1000ohms,1%,1/10W,0603	RFFS38	RK73H1JLTD1001F	59124
R125	Resistor,SMT,MF,1000ohms,1%,1/10W,0603	RFFS38	RK73H1JLTD1001F	59124
R126	Resistor,SMT,MF,1000ohms,1%,1/10W,0603	RFFS38	RK73H1JLTD1001F	59124
R127	Resistor,SMT,MF,1000ohms,1%,1/10W,0603	RFFS38	RK73H1JLTD1001F	59124
R128	Resistor,SMT,MF,10.0Kohms,1%,1/10W,0603	RFFS50	RK73H1JLTD1002F	59124
R129	Resistor,SMT,MF,1000ohms,1%,1/10W,0603	RFFS38	RK73H1JLTD1001F	59124
R130	Resistor,SMT,MF,10.0Kohms,1%,1/10W,0603	RFFS50	RK73H1JLTD1002F	59124
R131	Resistor,SMT,MF,1000ohms,1%,1/10W,0603	RFFS38	RK73H1JLTD1001F	59124
R132	Resistor,SMT,MF,39.2Kohms,1%,1/10W,0603	RFFS57	RK73H1JLTD3922F	59124
R133	Resistor,SMT,MF,10.0Kohms,1%,1/10W,0603	RFFS50	RK73H1JLTD1002F	59124
R134	Resistor,SMT,MF,1000ohms,1%,1/10W,0603	RFFS38	RK73H1JLTD1001F	59124
R135	Resistor,SMT,MF,1000ohms,1%,1/10W,0603	RFFS38	RK73H1JLTD1001F	59124
R136	Resistor,SMT,MF,1000ohms,1%,1/10W,0603	RFFS38	RK73H1JLTD1001F	59124
R137	Resistor,SMT,MF,1000ohms,1%,1/10W,0603	RFFS38	RK73H1JLTD1001F	59124
R138	Resistor,SMT,MF,1820ohms,1%,1/10W,0603	RFFS41	RK73H1JLTD1821F	59124
R139	Resistor,SMT,MF,3320ohms,1%,1/10W,0603	RFFS44	RK73H1JLTD3321F	59124
R140	Resistor,SMT,MF,1210ohms,1%,1/10W,0603	RFFS39	RK73H1JLTD1211F	59124
R141	Resistor,SMT,MF,562ohms,1%,1/10W,0603	RFFS35	RK73H1JLTD5620F	59124
R142	Resistor,SMT,MF,4750ohms,1%,1/10W,0603	RFFS46	RK73H1JLTD4751F	59124
R143	Resistor,SMT,MF,4750ohms,1%,1/10W,0603	RFFS46	RK73H1JLTD4751F	59124
R144	Resistor,SMT,MF,221ohms,1%,1/10W,0603	RFFS30	RK73H1JLTD2210F	59124

Continued from previous page

Exciter/Control PWB Assy-NOAA

REFDES	DESCRIPTION	NAUTEL #	VENDOR #	OEM CODE
R145	Resistor,SMT,MF,100ohms,1%,1/10W,0603	RFFS26	RK73H1JLTD1000F	59124
R146	Resistor,SMT,MF,100ohms,1%,1/10W,0603	RFFS26	RK73H1JLTD1000F	59124
R147	Resistor,SMT,MF,100ohms,1%,1/10W,0603	RFFS26	RK73H1JLTD1000F	59124
R148	Resistor,SMT,MF,100ohms,1%,1/10W,0603	RFFS26	RK73H1JLTD1000F	59124
R149	Resistor,SMT,MF,10.0Kohms,1%,1/10W,0603	RFFS50	RK73H1JLTD1002F	59124
R150	Resistor,SMT,MF,10.0Kohms,1%,1/10W,0603	RFFS50	RK73H1JLTD1002F	59124
R151	Resistor,SMT,MF,1000ohms,1%,1/10W,0603	RFFS38	RK73H1JLTD1001F	59124
R152	Resistor,SMT,MF,1000ohms,1%,1/10W,0603	RFFS38	RK73H1JLTD1001F	59124
R153	Resistor,SMT,MF,1000ohms,1%,1/10W,0603	RFFS38	RK73H1JLTD1001F	59124
R154	Resistor,SMT,MF,0.0ohms,Jumper,0603	RFFS01	RK73Z1JLTD	59124
R155	Resistor,SMT,MF,10.0Kohms,1%,1/10W,0603	RFFS50	RK73H1JLTD1002F	59124
R156	Resistor,SMT,MF,10.0Kohms,1%,1/10W,0603	RFFS50	RK73H1JLTD1002F	59124
R157	Resistor,SMT,MF,221Kohms,1%,1/10W,0603	RFFS66	RK73H1JLTD2213F	59124
R158	Resistor,SMT,MF,221Kohms,1%,1/10W,0603	RFFS66	RK73H1JLTD2213F	59124
R159	Resistor,SMT,MF,10.0Kohms,1%,1/10W,0603	RFFS50	RK73H1JLTD1002F	59124
R160	Resistor,SMT,MF,10.0Kohms,1%,1/10W,0603	RFFS50	RK73H1JLTD1002F	59124
R161	Resistor,SMT,MF,10.0Kohms,1%,1/10W,0603	RFFS50	RK73H1JLTD1002F	59124
R162	Resistor,SMT,MF,475Kohms,1%,1/10W,0603	RFFS70	RK73H1JLTD4753F	59124
R163	Resistor,SMT,MF,475Kohms,1%,1/10W,0603	RFFS70	RK73H1JLTD4753F	59124
R164	Resistor,SMT,MF,100ohms,1%,1/10W,0603	RFFS26	RK73H1JLTD1000F	59124
R165	Resistor,SMT,MF,100ohms,1%,1/10W,0603	RFFS26	RK73H1JLTD1000F	59124
R166	Resistor,SMT,MF,100ohms,1%,1/10W,0603	RFFS26	RK73H1JLTD1000F	59124
R167	Resistor,SMT,MF,0.0ohms,Jumper,0603	RFFS01	RK73Z1JLTD	59124
R168	Resistor,SMT,MF,0.0ohms,Jumper,0603	RFFS01	RK73Z1JLTD	59124
R169	Resistor,SMT,MF,100ohms,1%,1/10W,0603	RFFS26	RK73H1JLTD1000F	59124
R170	Resistor,SMT,MF,4750ohms,1%,1/10W,0603	RFFS46	RK73H1JLTD4751F	59124
R171	Resistor,SMT,MF,100ohms,1%,1/10W,0603	RFFS26	RK73H1JLTD1000F	59124
R172	Resistor,SMT,MF,4750ohms,1%,1/10W,0603	RFFS46	RK73H1JLTD4751F	59124
R173	Resistor,SMT,MF,4750ohms,1%,1/10W,0603	RFFS46	RK73H1JLTD4751F	59124
R174	Resistor,SMT,MF,4750ohms,1%,1/10W,0603	RFFS46	RK73H1JLTD4751F	59124
R175	Resistor,SMT,MF,4750ohms,1%,1/10W,0603	RFFS46	RK73H1JLTD4751F	59124
R176	Resistor,SMT,MF,0.0ohms,Jumper,0603	RFFS01	RK73Z1JLTD	59124
R177	Resistor,SMT,MF,0.0ohms,Jumper,0603	RFFS01	RK73Z1JLTD	59124
R178	Resistor,SMT,MF,100ohms,1%,1/10W,0603	RFFS26	RK73H1JLTD1000F	59124
R179	Resistor,SMT,MF,100ohms,1%,1/10W,0603	RFFS26	RK73H1JLTD1000F	59124
R180	Resistor,SMT,MF,0.0ohms,Jumper,0603	RFFS01	RK73Z1JLTD	59124
R181	Resistor,SMT,MF,0.0ohms,Jumper,0603	RFFS01	RK73Z1JLTD	59124
R182	Resistor,SMT,MF,0.0ohms,Jumper,0603	RFFS01	RK73Z1JLTD	59124
R183	Resistor,SMT,MF,0.0ohms,Jumper,0603	RFFS01	RK73Z1JLTD	59124

Continued from previous page

REFDES	DESCRIPTION	NAUTEL #	VENDOR #	OEM CODE
R184	Resistor,SMT,MF,0.0ohms,Jumper,0603	RFFS01	RK73Z1JLTD	59124
R185	Not Used	-	NOT USED	37338
R186	Not Used	-	NOT USED	37338
R187	Resistor,SMT,MF,100ohms,1%,1/10W,0603	RFFS26	RK73H1JLTD1000F	59124
R188	Resistor,SMT,MF,100ohms,1%,1/10W,0603	RFFS26	RK73H1JLTD1000F	59124
S01	Switch,SMt,Mom.,1PSTNO	SA60	KSC321G	ITT INDUST
T01	Transforemer, SMT, 4:1, 2-300MHz	TZ103	ADT4-6WT	
T02	Transformer, SMT, Balun, 4.5-1000MHz	TZ102	TC1-1-13M+(RoHS)	
TP02	Terminal, Test Point, PWB,Yellow	HR10	TP-106-01-04	COMP-C
TP04	Terminal, Test Point, PWB,Yellow	HR10	TP-106-01-04	COMP-C
TP06	Terminal, Test Point, PWB,Yellow	HR10	TP-106-01-04	COMP-C
TP07	Terminal, Test Point, PWB,Yellow	HR10	TP-106-01-04	COMP-C
U01	IC, Voltage Regulator, 1.5A,ADJ, Low Drop	UT110	LP38500TS-ADJ(STATIC) National	27014
U02	IC,SMT,Op Amp,Audio,Dual,SO-8	UP93	OP275GS(STATIC)	45496
U03	IC, Voltage Regulator, 1.5A,ADJ, Low Drop	UT110	LP38500TS-ADJ(STATIC) National	27014
U04	Bridge Recitifier, 400V, 0.5A, SOIC-4	US12	MB4S(STATIC)(RoHS)	07263
U05	IC,SMT,Op Amp,Audio,Dual,SO-8	UP93	OP275GS(STATIC)	45496
U06	IC, SMT, ADC, Analog In, 24bit Stereo SSOP20	UP107	PCM1803ADBR(STATIC)(RoHS) Texas Instruments	01295
U07	IC,SMT,Op Amp,Audio,Dual,SO-8	UP93	OP275GS(STATIC)	45496
U08	Bridge Recitifier, 400V, 0.5A, SOIC-4	US12	MB4S(STATIC)(RoHS)	07263
U09	IC,SMT,Op Amp,Audio,Dual,SO-8	UP93	OP275GS(STATIC)	45496
U10	IC, SDRAM, 128Mbit, x16, TSOP-II, Ext Temp	UX121	MT48LC8M16A2TG-7E IT:G(STATIC) Micron	
U11	IC,SMT,Power Supervisor,DualI/P,33/1.5V,MSOP	UX64	TPS3306-15DGK(STATIC)	01295
U12	IC, SMT, CMOS, Quad And Gate, SOIC-14	US30	74VHCT08AM(STATIC)	07263
U13	IC, SMT, CMOS, Quad And Gate, SOIC-14	US30	74VHCT08AM(STATIC)	07263
U14	IC, SMT, Voltage Regulator,Dual, ADJ TSSOP16	UP104	LT3028IFE(STATIC)	64155
U15	IC, SMT, DC-DC Converter,Boost/Inverting MSOP8	UP105	LT3580IMS8E#PBF(RoHS)(STATIC)	64155
U16	IC, SMT, CPLD, 10ns, Industrial Temp, VQFP-64	UW116	XC9572XL-10VQG64I(STATIC)(RoHS)	68994
U17	Res,SMT Network,0402x8,39R	UW63	EXB2HV390J	54473
U18	Res,SMT Network,0402x8,39R	UW63	EXB2HV390J	54473
U19	Res,SMT Network,0402x8,39R	UW63	EXB2HV390J	54473
U20	Res,SMT Network,0402x8,39R	UW63	EXB2HV390J	54473

Continued from previous page

Exciter/Control PWB Assy-NOAA

REFDES	DESCRIPTION	NAUTEL #	VENDOR #	OEM CODE
U21	IC,SMT,CMOS,8-Bit Shft Reg,Par O/P, SOIC-16	UDLS05	MC74HC595AD(STATIC)	04713
U22	IC, SMT, Blackfin DSP, 500MHz, bga-316	US08	ADSP-BF538BBCZ-5A(STATIC)(RoHS) ANALOG	45496
U23	IC, Voltage Regulator, 1.5A,ADJ, Low Drop	UT110	LP38500TS-ADJ(STATIC) National	27014
U24	IC,SMT,CMOS,Quad Tri-State Buffer, SOIC-14	UDLS06	MC74HC125AD(STATIC)	04713
U25	Res,SMT Network,0402x8,39R	UW63	EXB2HV390J	54473
U26	Res,SMT Network,0402x8,39R	UW63	EXB2HV390J	54473
U27	IC,SMT,CMOS,Hex Schm,Trig,Inv,SOIC-14	UDLS03	SN74AHCT14D(STATIC)	01295
U28	IC, SMT, RF QDUC, 1GSPS, TQFP-100	US35	AD9957BSVZ(STATIC)(RoHS)	
U29	IC, SMT, SPI Flash, 16Mbit,SOIC8W	UW109	M25P16-VMW6G(STATIC)(RoHS)	
U30	IC, Voltage Regulator, +8V, 1A DPAK	UT114	MC7808BDTG(STATIC)	04713
U31	IC,SMT,CMOS,Quad Tri-State Buffer, SOIC-14	UDLS06	MC74HC125AD(STATIC)	04713
U32	IC,SMT,DAC,8-Bit,4-ch,SPI,SOIC-14	UMDS01	TLV5620ID(STATIC)	64155
U33	IC,SMT,DAC,8-Bit,4-ch,SPI,SOIC-14	UMDS01	TLV5620ID(STATIC)	64155
U34	IC,SMT,2.5V Reference,0.1%,SOT-23-6	UX83	LT1790BIS6-2.5(STATIC)	64155
U35	IC, SMT, CMOS, PLL, 6GHz,TSSOP-16	US06	ADF4106BRU(STATIC)	45496
U36	IC, SMT, Inverter, UHS, Dual,UnBFR, 6p SC70 1.2mm wide	UD80	NC7WZU04P6X(RoHS)	SCT30
U37	Oscillator, VCXO, 10MHz, 3.3V, 2ppm, -40 to 85 C	UT109	MTDS320FV-10.000MHZ(STATIC)	
U38	IC,SMT,Opamp,Quad,Single Supply,SOIC-14	ULAS01	MC33074AD(STATIC)	04713
U39	IC, SMT, Digital Step Attenator, QFN-20	US19	PE4302-01(STATIC)	
U40	IC,SMT,DAC,16 Bit Serial,MSOP-8	UW64	DAC8531E(STATIC)	13919
U41	IC,SMT,RS-232 Transceiver,3.3V,SO-16	UDTS05	ADM3202ARN(STATIC)	45496
U42	IC,SMT,3.3V Voltage Reference,SOT23-3	UX97	REF3033AIDBZT(STATIC)	13919
U43	IC, SMT, SiGe Gain Block, 20dB, SOT-89-3	US21	SGA-7489(STATIC)	
U44	IC, SMT, ADC, 11-ch, 10-bit, 3.3V, SPI, SSOP-20	US25	TLV1543CDB(STATIC)(RoHS)	01295
U45	IC,SMT,Ultrafast Single Supply Comparator,TSSOP	UT83	AD8561ARUZ(STATIC)	45496
U46	IC,SMT,CMOS,8-Bit Shft Reg,Par O/P, SOIC-16	UDLS05	MC74HC595AD(STATIC)	04713
XE01	Conn, Header, SIP,12 Pin Breakaway,.10 Ctr	JQ16	1-103185-2	09482
XE02	Conn, Header, SIP,12 Pin Breakaway,.10 Ctr	JQ16	1-103185-2	09482
XE03	Conn, Header, SIP,12 Pin Breakaway,.10 Ctr	JQ16	1-103185-2	09482

Continued from previous page

NAPE82 Exciter/Control PWB Assy-NOAA

REFDES	DESCRIPTION	NAUTEL #	VENDOR #	OEM CODE
Y01	Oscillator,SMT,25MHz,3.3V	UT100	S1613B-25.0000(STATIC)(ROHS)	SARONIX
Y02	Oscillator, SMT, VCSO, 737.28MHz, PECL, 3.3V, -40to85C,50ppm	UT108	VS-705-ECE-KCAN-737M280000(STATIC)	

PS Distribution PWB Assy(Dual) - NOAA

REFDES	DESCRIPTION	NAUTEL #	VENDOR #	OEM CODE
C01	Cap,SMT,Ceramic,0.01uF,10%,50V,X7R,0603	CCFS04	C0603C103K5RAC	31433
C02	Cap,SMT,Ceramic,0.01uF,10%,50V,X7R,0603	CCFS04	C0603C103K5RAC	31433
C03	Cap,SMT,Ceramic,0.01uF,10%,50V,X7R,0603	CCFS04	C0603C103K5RAC	31433
C04	Cap,SMT,Ceramic,0.01uF,10%,50V,X7R,0603	CCFS04	C0603C103K5RAC	31433
C05	Capacitor,SMT,Ceramic,0.1uF,100V,10%	CT51	C1812C104K1RAC	91929
C06	Capacitor,SMT,Ceramic,0.01uF,100V,10%	CT50	C1206C103K1RAC	91929
C07	Cap, SMT, Ceramic, 0.1uF, 10%25V X7R, 0603	CCFS52	C0603C104K3RAC	31433
C08	Cap,SMT,Ceramic,0.01uF,10%,50V,X7R,0603	CCFS04	C0603C103K5RAC	31433
C09	Cap,SMT,Ceramic,0.01uF,10%,50V,X7R,0603	CCFS04	C0603C103K5RAC	31433
C10	Cap,SMT,Ceramic,0.01uF,10%,50V,X7R,0603	CCFS04	C0603C103K5RAC	31433
C11	Cap,SMT,Ceramic,0.01uF,10%,50V,X7R,0603	CCFS04	C0603C103K5RAC	31433
C12	Cap,SMT,Ceramic,0.01uF,10%,50V,X7R,0603	CCFS04	C0603C103K5RAC	31433
C13	Cap, SMT, Ceramic, 0.1uF, 10%25V X7R, 0603	CCFS52	C0603C104K3RAC	31433
C14	Cap,SMT,Ceramic,0.01uF,10%,50V,X7R,0603	CCFS04	C0603C103K5RAC	31433
C15	Cap,SMT,Ceramic,0.01uF,10%,50V,X7R,0603	CCFS04	C0603C103K5RAC	31433
C16	Cap,SMT,Ceramic,0.01uF,10%,50V,X7R,0603	CCFS04	C0603C103K5RAC	31433
C17	Cap, SMT, Ceramic, 0.1uF, 10%25V X7R, 0603	CCFS52	C0603C104K3RAC	31433
C18	Capacitor,SMT,Ceramic,0.1uF,100V,10%	CT51	C1812C104K1RAC	91929
C19	Cap,SMT,Ceramic,0.01uF,10%,50V,X7R,0603	CCFS04	C0603C103K5RAC	31433
C20	Capacitor,SMT,Ceramic,0.01uF,100V,10%	CT50	C1206C103K1RAC	91929
C21	Cap,SMT,Ceramic,0.01uF,10%,50V,X7R,0603	CCFS04	C0603C103K5RAC	31433
C22	Cap, SMT, Ceramic, 0.1uF, 10%25V X7R, 0603	CCFS52	C0603C104K3RAC	31433
C23	Cap,SMT,Ceramic,0.1uF,10%,50V,X7R,0805	CCFS07	C0805C104K5RAC	31433
C24	Cap,SMT,Ceramic,0.1uF,10%,50V,X7R,0805	CCFS07	C0805C104K5RAC	31433
C25	Cap,SMT,Ceramic,0.1uF,10%,50V,X7R,0805	CCFS07	C0805C104K5RAC	31433
C26	Cap, SMT, Ceramic, 0.1uF, 10%25V X7R, 0603	CCFS52	C0603C104K3RAC	31433
C27	Cap, SMT, Ceramic, 0.1uF, 10%25V X7R, 0603	CCFS52	C0603C104K3RAC	31433
C28	Cap, SMT, Ceramic, 0.1uF, 10%25V X7R, 0603	CCFS52	C0603C104K3RAC	31433
C29	Cap,SMT,Ceramic,0.01uF,10%,50V,X7R,0603	CCFS04	C0603C103K5RAC	31433
C30	Cap,SMT,Ceramic,0.01uF,10%,50V,X7R,0603	CCFS04	C0603C103K5RAC	31433
C31	Cap, SMT, Ceramic, 0.1uF, 10%25V X7R, 0603	CCFS52	C0603C104K3RAC	31433
C32	Cap,SMT,Ceramic,0.01uF,10%,50V,X7R,0603	CCFS04	C0603C103K5RAC	31433
C33	Cap,SMT,Ceramic,0.01uF,10%,50V,X7R,0603	CCFS04	C0603C103K5RAC	31433
C34	Cap,SMT,Ceramic,0.01uF,10%,50V,X7R,0603	CCFS04	C0603C103K5RAC	31433
C35	Cap,SMT,Ceramic,0.01uF,10%,50V,X7R,0603	CCFS04	C0603C103K5RAC	31433
C36	Cap, SMT, Ceramic, 0.1uF, 10%25V X7R, 0603	CCFS52	C0603C104K3RAC	31433
C37	Cap, SMT, Ceramic, 0.1uF, 10%25V X7R, 0603	CCFS52	C0603C104K3RAC	31433
C38	Cap, SMT, Ceramic, 0.1uF, 10%25V X7R, 0603	CCFS52	C0603C104K3RAC	31433
C39	Cap,SMT,Ceramic,0.01uF,10%,50V,X7R,0603	CCFS04	C0603C103K5RAC	31433

Continued from previous page

REFDES	DESCRIPTION	NAUTEL #	VENDOR #	OEM CODE
C40	Cap,SMT,Ceramic,0.01uF,10%,50V,X7R,0603	CCFS04	C0603C103K5RAC	31433
C41	Cap,SMT,Ceramic,0.01uF,10%,50V,X7R,0603	CCFS04	C0603C103K5RAC	31433
C42	Cap,SMT,Ceramic,0.1uF,10%,50V,X7R,0805	CCFS07	C0805C104K5RAC	31433
C43	Cap,SMT,Ceramic,0.01uF,10%,50V,X7R,0603	CCFS04	C0603C103K5RAC	31433
C44	Capacitor, SMT, Ceramic, 2.2uF 10%, 100V, X7R, 1812	CT64	GRM43ER72A225KA01L	72982
C45	Cap,SMT,Tantalum,10uF,10%,16V,1411	CTFS01	T494B106K016AS	31433
C46	Cap,SMT,Ceramic,0.01uF,10%,50V,X7R,0603	CCFS04	C0603C103K5RAC	31433
C47	Capacitor, SMT, Ceramic, 2.2uF 10%, 100V, X7R, 1812	CT64	GRM43ER72A225KA01L	72982
C48	Cap, SMT, Ceramic, 0.1uF, 10%25V X7R, 0603	CCFS52	C0603C104K3RAC	31433
C49	Not Used	-	NOT USED	37338
C50	Cap,SMT,Ceramic,0.1uF,10%,50V,X7R,0805	CCFS07	C0805C104K5RAC	31433
C51	Cap, SMT, Ceramic, 0.1uF, 10%25V X7R, 0603	CCFS52	C0603C104K3RAC	31433
C52	Capacitor,SMT,Ceramic,0.1uF,100V,10%	CT51	C1812C104K1RAC	91929
C53	Cap, SMT, Ceramic, 0.68uF, 10% 100V X7R 1210	CCFS71	C3225X7R2A684K	54583
C54	Cap, SMT, Ceramic, 0.68uF, 10% 100V X7R 1210	CCFS71	C3225X7R2A684K	54583
C55	Cap,SMT,Tantalum,1uF,10%,35V,1411	CTFS02	T494B105K035AS	31433
C56	Cap,SMT,Ceramic,1uF,10%,100V,X7R,1210	CCFS60	12101C105KAT2A(ROHS)	AVX CORP
C57	Cap,SMT,Ceramic,0.01uF,10%,50V,X7R,0603	CCFS04	C0603C103K5RAC	31433
C58	Cap,SMT,Ceramic,0.1uF,10%,50V,X7R,0805	CCFS07	C0805C104K5RAC	31433
C59	Capacitor,SMT,Ceramic,0.1uF,100V,10%	CT51	C1812C104K1RAC	91929
C60	Cap,SMT,Ceramic,1uF,10%,100V,X7R,1210	CCFS60	12101C105KAT2A(ROHS)	AVX CORP
C61	Cap, SMT, Ceramic, 0.68uF, 10% 100V X7R 1210	CCFS71	C3225X7R2A684K	54583
C62	Cap,SMT,Ceramic,1uF,10%,100V,X7R,1210	CCFS60	12101C105KAT2A(ROHS)	AVX CORP
C63	Capacitor,SMT,Ceramic,0.1uF,100V,10%	CT51	C1812C104K1RAC	91929
C64	Capacitor, SMT, Ceramic, 2.2uF 10%, 100V, X7R, 1812	CT64	GRM43ER72A225KA01L	72982
C65	Capacitor, SMT, Ceramic, 2.2uF 10%, 100V, X7R, 1812	CT64	GRM43ER72A225KA01L	72982
C66	Not Used	-	NOT USED	37338
C67	Capacitor,SMT,Ceramic,0.1uF,100V,10%	CT51	C1812C104K1RAC	91929
C68	Cap,SMT,Ceramic,0.01uF,10%,50V,X7R,0603	CCFS04	C0603C103K5RAC	31433
C69	Cap,SMT,Ceramic,0.01uF,10%,50V,X7R,0603	CCFS04	C0603C103K5RAC	31433
C70	Cap, SMT, Ceramic, 0.1uF, 10%25V X7R, 0603	CCFS52	C0603C104K3RAC	31433
C71	Cap,SMT,Tantalum,10uF,10%,35V,2917	CTFS03	T494D106K035AS	31433
C72	Cap,SMT,Ceramic,0.01uF,10%,50V,X7R,0603	CCFS04	C0603C103K5RAC	31433
C73	Cap,SMT,Ceramic,0.1uF,10%,50V,X7R,0805	CCFS07	C0805C104K5RAC	31433
C74	Cap,SMT,Ceramic,0.01uF,10%,50V,X7R,0603	CCFS04	C0603C103K5RAC	31433
C75	Cap,SMT,Ceramic,0.01uF,10%,50V,X7R,0603	CCFS04	C0603C103K5RAC	31433

Continued from previous page

PS Distribution PWB Assy(Dual) - NOAA

REFDES	DESCRIPTION	NAUTEL #	VENDOR #	OEM CODE
C76	Cap, SMT, Ceramic, 0.1uF, 10%25V X7R, 0603	CCFS52	C0603C104K3RAC	31433
C77	Capacitor,SMT,Ceramic,0.01uF,100V,10%	CT50	C1206C103K1RAC	91929
C78	Capacitor,SMT,Ceramic,0.1uF,100V,10%	CT51	C1812C104K1RAC	91929
C79	Cap,SMT,Ceramic,0.01uF,10%,50V,X7R,0603	CCFS04	C0603C103K5RAC	31433
C80	Cap,SMT,Ceramic,0.01uF,10%,50V,X7R,0603	CCFS04	C0603C103K5RAC	31433
C81	Cap, SMT, Ceramic, 0.1uF, 10%25V X7R, 0603	CCFS52	C0603C104K3RAC	31433
C82	Cap,SMT,Ceramic,0.01uF,10%,50V,X7R,0603	CCFS04	C0603C103K5RAC	31433
C83	Cap,SMT,Ceramic,0.01uF,10%,50V,X7R,0603	CCFS04	C0603C103K5RAC	31433
C84	Cap, SMT, Ceramic, 0.1uF, 10%25V X7R, 0603	CCFS52	C0603C104K3RAC	31433
C85	Cap,SMT,Ceramic,0.01uF,10%,50V,X7R,0603	CCFS04	C0603C103K5RAC	31433
C86	Cap,SMT,Ceramic,0.01uF,10%,50V,X7R,0603	CCFS04	C0603C103K5RAC	31433
C87	Cap, SMT, Ceramic, 0.1uF, 10%25V X7R, 0603	CCFS52	C0603C104K3RAC	31433
C88	Cap,SMT,Ceramic,0.01uF,10%,50V,X7R,0603	CCFS04	C0603C103K5RAC	31433
C89	Cap,SMT,Ceramic,0.01uF,10%,50V,X7R,0603	CCFS04	C0603C103K5RAC	31433
C90	Capacitor, Metal, Polyester, 10uF 100V	CT38	DME1W10K	14655
C91	Capacitor, Metal, Polyester, 10uF 100V	CT38	DME1W10K	14655
C92	Capacitor, Metal, Polyester, 10uF 100V	CT38	DME1W10K	14655
CR01	Diode,SMT,Switching,250V,0.2A,SOD-323	QDRS01	BAS21HT1(STATIC)	04713
CR02	Diode,SMT,Switching,250V,0.2A,SOD-323	QDRS01	BAS21HT1(STATIC)	04713
E01	Connector, Quick-Dis, M,1/4 Tab, PWB	HR26	1287	91833
E02	Connector, Quick-Dis, M,1/4 Tab, PWB	HR26	1287	91833
E03	Connector, Quick-Dis, M,1/4 Tab, PWB	HR26	1287	91833
E04	Connector, Quick-Dis, M,1/4 Tab, PWB	HR26	1287	91833
E05	Connector, Quick-Dis, M,1/4 Tab, PWB	HR26	1287	91833
E06	Connector, Quick-Dis, M,1/4 Tab, PWB	HR26	1287	91833
J01	Conn, 47 Contact, F, 90 deg,PWB Mt	JA95	PCIH47F400A1	28198
J02	Conn, Header, Ribbon Cbl, 20Pin	JQ55	103308-5	00779
J03	Conn, Header, Ribbon Cbl, 20Pin	JQ55	103308-5	00779
J04	Conn, 47 Contact, F, 90 deg,PWB Mt	JA95	PCIH47F400A1	28198
L01	Inductor,SMT,Pwr,Shielded DrumCore,P1167series, 2A, 10.0uH	LS16	P1167.103	01961
L02	Choke, SMT, Common Mode, 2800ohm, 1.5A	LS25	PE-53911NL(RoHS)	01961
L03	Inductor,SMT,Pwr,Shielded DrumCore,P1167series, 2A, 10.0uH	LS16	P1167.103	01961
Q01	Transistor, FET, P-channel,D2Pak	QR71	IRF9540NSPBF(STATIC)(RoHS)	
Q02	Transistor,SMT,NPN,Switch/Amp,SOT-23	QBNS01	MMBT4401LT1(STATIC)	04713
R01	Resistor, SMT, MF, 22.1K Ohms, 1% 1/4W	RAD41	RK73H2BL2212F	59124
R02	Resistor, SMT, MF, 4750 Ohms,1%, 1/4W	RAD33	RK73H2BL4751F	59124
R03	Resistor, SMT, MF, 4750 Ohms,1%, 1/4W	RAD33	RK73H2BL4751F	59124

Continued from previous page

REFDES	DESCRIPTION	NAUTEL #	VENDOR #	OEM CODE
R04	Resistor, SMT, MF, 4750 Ohms,1%, 1/4W	RAD33	RK73H2BL4751F	59124
R05	Resistor, SMT, MF, 4750 Ohms,1%, 1/4W	RAD33	RK73H2BL4751F	59124
R06	Resistor, SMT, MF, 82.5K Ohms, 1% 1/4W	RAD48	RK73H2BL8252F	59124
R07	Resistor, SMT, MF, 100 Ohms,1% 1/4W	RAD13	RK73H2BL1000F	59124
R08	Resistor, SMT, MF, 100 Ohms,1% 1/4W	RAD13	RK73H2BL1000F	59124
R09	Resistor, SMT, MF, 100 Ohms,1% 1/4W	RAD13	RK73H2BL1000F	59124
R10	Resistor, SMT, MF, 100 Ohms,1% 1/4W	RAD13	RK73H2BL1000F	59124
R11	Resistor,SMT,MF,1000ohms,1%,1/10W,0603	RFFS38	RK73H1JLTD1001F	59124
R12	Resistor, SMT, MF, 4750 Ohms,1%, 1/4W	RAD33	RK73H2BL4751F	59124
R13	Resistor, SMT, MF, 100 Ohms,1% 1/4W	RAD13	RK73H2BL1000F	59124
R14	Resistor, SMT, MF, 100 Ohms,1% 1/4W	RAD13	RK73H2BL1000F	59124
R15	Resistor, SMT, MF, 100 Ohms,1% 1/4W	RAD13	RK73H2BL1000F	59124
R16	Resistor, SMT, MF, 100 Ohms,1% 1/4W	RAD13	RK73H2BL1000F	59124
R17	Resistor, SMT, MF, 4750 Ohms,1%, 1/4W	RAD33	RK73H2BL4751F	59124
R18	Resistor, SMT, MF, 4750 Ohms,1%, 1/4W	RAD33	RK73H2BL4751F	59124
R19	Resistor, SMT, MF, 4750 Ohms,1%, 1/4W	RAD33	RK73H2BL4751F	59124
R20	Resistor, SMT, MF, 4750 Ohms,1%, 1/4W	RAD33	RK73H2BL4751F	59124
R21	Not Used	-	NOT USED	37338
R22	Resistor,SMT,MF,12.1Kohms,1%,1/10W,0603	RFFS51	RK73H1JLTD1212F	59124
R23	Resistor, SMT, 0.1ohms, 1206,1% 1/4W	RAD74	ERJ-L08KF10CV	37338
R24	Resistor,SMT,MF,10.0Kohms,1%,1/10W,0603	RFFS50	RK73H1JLTD1002F	59124
R25	Resistor,SMT,MF,10.0Kohms,1%,1/10W,0603	RFFS50	RK73H1JLTD1002F	59124
R26	Not Used	-	NOT USED	37338
R27	Resistor,SMT,MF,12.1Kohms,1%,1/10W,0603	RFFS51	RK73H1JLTD1212F	59124
R28	Resistor,SMT,MF,68.1Kohms,1%,1/10W,0603	RFFS60	RK73H1JLTD6812F	59124
R29	Resistor,SMT,MF,15.0Kohms,1%,1/10W,0603	RFFS52	RK73H1JLTD1502F	59124
R30	Resistor,SMT,MF,3320ohms,1%,1/10W,0603	RFFS44	RK73H1JLTD3321F	59124
R31	Resistor,SMT,MF,10.0Kohms,1%,1/10W,0603	RFFS50	RK73H1JLTD1002F	59124
R32	Resistor,SMT,MF,4750ohms,1%,1/10W,0603	RFFS46	RK73H1JLTD4751F	59124
R33	Resistor,SMT,MF,4750ohms,1%,1/10W,0603	RFFS46	RK73H1JLTD4751F	59124
R34	Resistor,SMT,MF,8250ohms,1%,1/10W,0603	RFFS49	RK73H1JLTD8251F	59124
R35	Resistor,SMT,MF,0.005ohms,1%,1W,2512	RFCS01	ERJM1WSF5M0U	0J4G8
R36	Not Used	-	NOT USED	37338
R37	Resistor,SMT,MF,12.1Kohms,1%,1/10W,0603	RFFS51	RK73H1JLTD1212F	59124
R38	Resistor,SMT,MF,0.005ohms,1%,1W,2512	RFCS01	ERJM1WSF5M0U	0J4G8
R39	Resistor,SMT,MF,475Kohms,1%,1/10W,0603	RFFS70	RK73H1JLTD4753F	59124
R40	Resistor,SMT,MF,475Kohms,1%,1/10W,0603	RFFS70	RK73H1JLTD4753F	59124
R41	Resistor,SMT,MF,475Kohms,1%,1/10W,0603	RFFS70	RK73H1JLTD4753F	59124
R42	Resistor,SMT,MF,0.005ohms,1%,1W,2512	RFCS01	ERJM1WSF5M0U	0J4G8

Continued from previous page

REFDES	DESCRIPTION	NAUTEL #	VENDOR #	OEM CODE
R43	Resistor,SMT,MF,10.0Kohms,1%,1/10W,0603	RFFS50	RK73H1JLTD1002F	59124
R44	Resistor,SMT,MF,10.0Kohms,1%,1/10W,0603	RFFS50	RK73H1JLTD1002F	59124
R45	Resistor,SMT,MF,10.0Kohms,1%,1/10W,0603	RFFS50	RK73H1JLTD1002F	59124
R46	Resistor,SMT,MF,0.005ohms,1%,1W,2512	RFCS01	ERJM1WSF5M0U	0J4G8
R47	Resistor,SMT,MF,10.0Kohms,1%,1/10W,0603	RFFS50	RK73H1JLTD1002F	59124
R48	Resistor,SMT,MF,10.0Kohms,1%,1/10W,0603	RFFS50	RK73H1JLTD1002F	59124
R49	Not Used	-	NOT USED	37338
R50	Resistor,SMT,MF,12.1Kohms,1%,1/10W,0603	RFFS51	RK73H1JLTD1212F	59124
R51	Resistor,SMT,MF,10.0Kohms,1%,1/10W,0603	RFFS50	RK73H1JLTD1002F	59124
R52	Resistor,SMT,MF,10.0Kohms,1%,1/10W,0603	RFFS50	RK73H1JLTD1002F	59124
R53	Resistor,SMT,MF,10.0Kohms,1%,1/10W,0603	RFFS50	RK73H1JLTD1002F	59124
R54	Resistor,SMT,MF,10.0Kohms,1%,1/10W,0603	RFFS50	RK73H1JLTD1002F	59124
R55	Not Used	-	NOT USED	37338
R56	Resistor,SMT,MF,12.1Kohms,1%,1/10W,0603	RFFS51	RK73H1JLTD1212F	59124
R57	Resistor,SMT,MF,10.0Kohms,1%,1/10W,0603	RFFS50	RK73H1JLTD1002F	59124
R58	Resistor,SMT,MF,4750ohms,1%,1/10W,0603	RFFS46	RK73H1JLTD4751F	59124
R59	Resistor,SMT,MF,121Kohms,1%,1/10W,0603	RFFS63	RK73H1JLTD1213F	59124
R60	Resistor,SMT,MF,4750ohms,1%,1/10W,0603	RFFS46	RK73H1JLTD4751F	59124
R61	Resistor,SMT,MF,121Kohms,1%,1/10W,0603	RFFS63	RK73H1JLTD1213F	59124
R62	Resistor,SMT,MF,10.0Kohms,1%,1/10W,0603	RFFS50	RK73H1JLTD1002F	59124
R63	Resistor,SMT,MF,1000ohms,1%,1/10W,0603	RFFS38	RK73H1JLTD1001F	59124
R64	Resistor,SMT,MF,10.0Kohms,1%,1/10W,0603	RFFS50	RK73H1JLTD1002F	59124
R65	Not Used	-	NOT USED	37338
R66	Resistor,SMT,MF,12.1Kohms,1%,1/10W,0603	RFFS51	RK73H1JLTD1212F	59124
R67	Resistor,SMT,MF,0.005ohms,1%,1W,2512	RFCS01	ERJM1WSF5M0U	0J4G8
R68	Resistor,SMT,MF,10.0Kohms,1%,1/10W,0603	RFFS50	RK73H1JLTD1002F	59124
R69	Resistor,SMT,MF,10.0Kohms,1%,1/10W,0603	RFFS50	RK73H1JLTD1002F	59124
R70	Not Used	-	NOT USED	37338
R71	Resistor,SMT,MF,12.1Kohms,1%,1/10W,0603	RFFS51	RK73H1JLTD1212F	59124
R72	Resistor,SMT,MF,0.005ohms,1%,1W,2512	RFCS01	ERJM1WSF5M0U	0J4G8
R73	Resistor,SMT,MF,10.0Kohms,1%,1/10W,0603	RFFS50	RK73H1JLTD1002F	59124
R74	Resistor,SMT,MF,0.005ohms,1%,1W,2512	RFCS01	ERJM1WSF5M0U	0J4G8
R75	Not Used	-	NOT USED	37338
R76	Resistor,SMT,MF,12.1Kohms,1%,1/10W,0603	RFFS51	RK73H1JLTD1212F	59124
R77	Resistor,SMT,MF,0.005ohms,1%,1W,2512	RFCS01	ERJM1WSF5M0U	0J4G8
R78	Resistor,SMT,MF,0.005ohms,1%,1W,2512	RFCS01	ERJM1WSF5M0U	0J4G8
R79	Resistor,SMT,MF,10.0Kohms,1%,1/10W,0603	RFFS50	RK73H1JLTD1002F	59124
R80	Not Used	-	NOT USED	37338
R81	Resistor,SMT,MF,12.1Kohms,1%,1/10W,0603	RFFS51	RK73H1JLTD1212F	59124

Continued from previous page

PS Distribution PWB Assy(Dual) - NOAA

REFDES	DESCRIPTION	NAUTEL #	VENDOR #	OEM CODE
R82	Resistor,SMT,MF,10.0Kohms,1%,1/10W,0603	RFFS50	RK73H1JLTD1002F	59124
R83	Not Used	-	NOT USED	37338
R84	Resistor,SMT,MF,12.1Kohms,1%,1/10W,0603	RFFS51	RK73H1JLTD1212F	59124
RT01	Thermistor, PTC, .04-.06 Ohms, 3.00A Hold	RX10	RXE300	4G927
RT02	Thermistor, PTC, .15-.25 Ohms, 1.1A Hold	RT17	RXE110	06090
TB01	Terminal Block, 6-Pos, Dual Barrier, 20A	JT48	1-1437667-2	TYCO
TB02	Terminal Block, 6-Pos, Dual Barrier, 20A	JT48	1-1437667-2	TYCO
TP17	Terminal, SMT, Test Point, PWB	HAJ66	TP-107-02-1-T(RoHS) COMPONENTS CORP	
U01	IC,SMT,CMOS,8-Bit Shft Reg,Par I/P, SOIC-16	UDLS04	MC74HC165AD(STATIC)	04713
U02	IC, Amplifier, Instrumentation	UT74	MAX4080SASA(STATIC)	1E566
U03	IC, Amplifier, Instrumentation	UT74	MAX4080SASA(STATIC)	1E566
U04	IC, Amplifier, Instrumentation	UT74	MAX4080SASA(STATIC)	1E566
U05	IC,SMT,ADC,10-Bit,11-ch,SPI,SOIC-20	UMAS01	TLC1543IDW(STATIC)	01295
U06	IC, Amplifier, Instrumentation	UT74	MAX4080SASA(STATIC)	1E566
U07	IC,SMT,ADC,10-Bit,11-ch,SPI,SOIC-20	UMAS01	TLC1543IDW(STATIC)	01295
U08	IC, Amplifier, Instrumentation	UT74	MAX4080SASA(STATIC)	1E566
U09	Power Supply, DC to DC, 36-75In, 5 Out, 3A	UW113	SW003A0A91Z(STATIC)(RoHS)Lineage Power	1TT19
U10	IC,SMT,Opamp,Quad,Rail-To-Rail,SOIC-14	ULAS02	TLV2374ID(STATIC)	01295
U11	IC,SMT,4.096V Reference,0.1%,SOT-23-6	ULRS02	LT1790BIS6-4.096(STATIC)	64155
U12	Power Supply,DC-DC,36-75 In,15 Out, 1A	UW85	SW001A0C91(STATIC) Lineage Power	1TT19
U13	IC, Amplifier, Instrumentation	UT74	MAX4080SASA(STATIC)	1E566
U14	IC, Amplifier, Instrumentation	UT74	MAX4080SASA(STATIC)	1E566
U15	IC, Amplifier, Instrumentation	UT74	MAX4080SASA(STATIC)	1E566
U16	IC, Amplifier, Instrumentation	UT74	MAX4080SASA(STATIC)	1E566
U17	IC, Amplifier, Instrumentation	UT74	MAX4080SASA(STATIC)	1E566

Splitter PWB Assy - NOAA

REFDES	DESCRIPTION	NAUTEL #	VENDOR #	OEM CODE
C01	Capacitor, Ceramic, 0.1uF 10%100V	CCG07	CKR06BX104KRV	56289
C02	Capacitor, Ceramic, 0.1uF 10%100V	CCG07	CKR06BX104KRV	56289
C03	Capacitor, Ceramic, 0.1uF 10%100V	CCG07	CKR06BX104KRV	56289
C04	Capacitor, Ceramic, 0.1uF 10%100V	CCG07	CKR06BX104KRV	56289
C05	Capacitor, Ceramic, 0.1uF 10%100V	CCG07	CKR06BX104KRV	56289
C06	Capacitor, Ceramic, 0.1uF 10%100V	CCG07	CKR06BX104KRV	56289
C07	Capacitor, Ceramic, 0.1uF 10%100V	CCG07	CKR06BX104KRV	56289
C08	Capacitor, Ceramic, 0.1uF 10%100V	CCG07	CKR06BX104KRV	56289
C09	Capacitor, Ceramic, 0.1uF 10%100V	CCG07	CKR06BX104KRV	56289
C10	Capacitor, Ceramic, 0.1uF 10%100V	CCG07	CKR06BX104KRV	56289
C11	Capacitor, Ceramic, 0.1uF 10%100V	CCG07	CKR06BX104KRV	56289
C12	Capacitor, Ceramic, 0.1uF 10%100V	CCG07	CKR06BX104KRV	56289
J01	MTA, Keyed Square Post HeaderAssy, 3 pin	JU60	647123-3	
J02	MTA, Keyed Square Post HeaderAssy, 3 pin	JU60	647123-3	
J03	MTA, Keyed Square Post HeaderAssy, 3 pin	JU60	647123-3	
J04	MTA, Keyed Square Post HeaderAssy, 3 pin	JU60	647123-3	
J05	MTA, Keyed Square Post HeaderAssy, 3 pin	JU60	647123-3	
J06	Not Used	-	NOT USED	37338
J07	Conn, Edge Card, 3A, 28 Contacts, Dual Row, 30u Gold M3	JN68	346-028-620-207(RoHS)	31781
L01	Inductor, SMT, 12.5nH, 2%, 4A3.15mm H x 3.94mm L	LS32	A04TGLC	
R01	Resistor, SMT, AIN, 100 ohms,2%, 30W, 3725	RT57	CS13725TO100GBK(RoHS)	
R02	Resistor, SMT, AIN, 100 ohms,2%, 40W, 1373	RT58	CS13737TO100GBK(RoHS)	
R03	Resistor, SMT, AIN, 100 ohms,2%, 30W, 3725	RT57	CS13725TO100GBK(RoHS)	
R04	Resistor, SMT, AIN, 100 ohms,2%, 30W, 3725	RT57	CS13725TO100GBK(RoHS)	
R05	Resistor, SMT, AIN, 100 ohms,2%, 30W, 3725	RT57	CS13725TO100GBK(RoHS)	
R06	Resistor, SMT, AIN, 100 ohms,2%, 30W, 3725	RT57	CS13725TO100GBK(RoHS)	
R07	Resistor, SMT, AIN, 100 ohms,2%, 30W, 3725	RT57	CS13725TO100GBK(RoHS)	
R08	Resistor, SMT, AIN, 100 ohms,2%, 30W, 3725	RT57	CS13725TO100GBK(RoHS)	
R09	Resistor, SMT, AIN, 100 ohms,2%, 40W, 1373	RT58	CS13737TO100GBK(RoHS)	
R10	Resistor, SMT, AIN, 100 ohms,2%, 30W, 3725	RT57	CS13725TO100GBK(RoHS)	
RT01	Thermistor, 200K Ohms @ 25C	RX07	135-204QAG-J01	1BH13
RT02	Thermistor, PTC, .15-.25 Ohms, 1.1A Hold	RT17	RXE110	06090
RT03	Thermistor, 200K Ohms @ 25C	RX07	135-204QAG-J01	1BH13
RT04	Thermistor, PTC, .15-.25 Ohms, 1.1A Hold	RT17	RXE110	06090

Continued from previous page

NAPI127 Splitter PWB Assy - NOAA

REFDES	DESCRIPTION	NAUTEL #	VENDOR #	OEM CODE
RT05	Thermistor, PTC, .15-.25 Ohms, 1.1A Hold	RT17	RXE110	06090
RT06	Thermistor, PTC, .15-.25 Ohms, 1.1A Hold	RT17	RXE110	06090
RT07	Thermistor, PTC, .15-.25 Ohms, 1.1A Hold	RT17	RXE110	06090
U01	Not Used	-	NOT USED	37338

REFDES	DESCRIPTION	NAUTEL #	VENDOR #	OEM CODE
C01	Cap,SMT,Ceramic,0.001uF,10%,50V,X7R,0603	CCFS01	C0603C102K5RAC	31433
C02	Cap,SMT,Ceramic,390pF,2%,50V,C0G,0603	CCFS37	C0603C391G5GAC	31433
C03	Cap,SMT,Ceramic,390pF,2%,50V,C0G,0603	CCFS37	C0603C391G5GAC	31433
C04	Cap, SMT, Ceramic, 0.1uF, 10%25V X7R, 0603	CCFS52	C0603C104K3RAC	31433
C05	Cap, SMT, Ceramic, 0.1uF, 10%25V X7R, 0603	CCFS52	C0603C104K3RAC	31433
C06	Cap,SMT,Ceramic,100pF,2%,50V,C0G,0603	CCFS32	C0603C101G5GAC	31433
C07	Cap,SMT,Ceramic,100pF,2%,50V,C0G,0603	CCFS32	C0603C101G5GAC	31433
C08	Cap,SMT,Ceramic,0.01uF,10%,50V,X7R,0603	CCFS04	C0603C103K5RAC	31433
C09	Cap,SMT,Ceramic,0.001uF,10%,50V,X7R,0603	CCFS01	C0603C102K5RAC	31433
C10	Cap,SMT,Ceramic,0.01uF,10%,50V,X7R,0603	CCFS04	C0603C103K5RAC	31433
C11	Cap,SMT,Ceramic,0.001uF,10%,50V,X7R,0603	CCFS01	C0603C102K5RAC	31433
CR01	Diode,SMT,Schottky,30V,0.2A,SOD-323	QDSS01	BAT54HT1(STATIC)	04713
J01	Conn, Edge Card, 3A, 12 Contacts, Dual Row, 30u Gold M3	JN69	346-012-620-207(RoHS)	31781
R01	Resistor, SMT, MF, 49.9 Ohms,1% 1/4W	RAE21	RK73H2BL49R9F	59124
R02	Resistor, SMT, MF, 3320 Ohms,1% 1/4W	RAD31	RK73H2BL3321F	59124
R03	Resistor,SMT,MF,10.0Kohms,1%,1/10W,0603	RFFS50	RK73H1JLTD1002F	59124
R04	Resistor, SMT, MF, 49.9 Ohms,1% 1/4W	RAE21	RK73H2BL49R9F	59124
R05	Resistor,SMT,MF,10.0Kohms,1%,1/10W,0603	RFFS50	RK73H1JLTD1002F	59124
R06	Resistor,SMT,MF,150ohms,1%,1/10W,0603	RFFS28	RK73H1JLTD1500F	59124
R07	Resistor,SMT,MF,100ohms,1%,1/10W,0603	RFFS26	RK73H1JLTD1000F	59124
R08	Resistor,SMT,MF,274ohms,1%,1/10W,0603	RFFS31	RK73H1JLTD2740F	59124
R09	Resistor,SMT,MF,39.2ohms,1%,1/10W,0603	RFFS21	RK73H1JLTD39R2F	59124
R10	Resistor,SMT,MF,221ohms,1%,1/10W,0603	RFFS30	RK73H1JLTD2210F	59124
R11	Resistor,SMT,MF,100ohms,1%,1/10W,0603	RFFS26	RK73H1JLTD1000F	59124
R12	Resistor,SMT,MF,150ohms,1%,1/10W,0603	RFFS28	RK73H1JLTD1500F	59124
R13	Resistor,SMT,MF,39.2ohms,1%,1/10W,0603	RFFS21	RK73H1JLTD39R2F	59124
R14	Resistor,SMT,MF,10.0Kohms,1%,1/10W,0603	RFFS50	RK73H1JLTD1002F	59124
R15	Resistor,SMT,MF,10.0Kohms,1%,1/10W,0603	RFFS50	RK73H1JLTD1002F	59124
TP01	Terminal, SMT, Test Point, PWB	HAJ66	TP-107-02-1-T(RoHS) COMPONENTS CORP	
TP02	Terminal, SMT, Test Point, PWB	HAJ66	TP-107-02-1-T(RoHS) COMPONENTS CORP	
TP03	Terminal, SMT, Test Point, PWB	HAJ66	TP-107-02-1-T(RoHS) COMPONENTS CORP	
TP04	Terminal, SMT, Test Point, PWB	HAJ66	TP-107-02-1-T(RoHS) COMPONENTS CORP	
U01	IC, SMT, TruPwr Detect, LF-2.5GHz, MSOP	UX110	AD8361ARM(Static)	
U02	IC, SMT, TruPwr Detect, LF-2.5GHz, MSOP	UX110	AD8361ARM(Static)	

NAPP05 System Output Power Probe PWBAssy - NOAA

REFDES	DESCRIPTION	NAUTEL #	VENDOR #	OEM CODE
J01	Conn, Receptacle, Right Angle, SMA, PWB Mount	JN60	132203(RoHS)	02660
J02	Conn, Receptacle, Right Angle, SMA, PWB Mount	JN60	132203(RoHS)	02660
J03	Conn, Receptacle, Right Angle, SMA, PWB Mount	JN60	132203(RoHS)	02660
R01	Resistor, SMT, MF, 49.9 Ohms,1% 1/4W	RAE21	RK73H2BL49R9F	59124

NAPX39 Button/LED PWB Assy - NOAA

REFDES	DESCRIPTION	NAUTEL #	VENDOR #	OEM CODE
DS01	Diode, LED, Bicolor, Red & Green	QM16	SSL-LX5093IGW	1EM90
DS02	Diode, LED, Bicolor, Red & Green	QM16	SSL-LX5093IGW	1EM90
DS03	Diode, LED, Bicolor, Red & Green	QM16	SSL-LX5093IGW	1EM90
DS04	Diode, LED, Bicolor, Red & Green	QM16	SSL-LX5093IGW	1EM90
J01	Conn, Header, Ribbon Cbl, 40-Pin	JQ53	103308-8	00779
J02	Conn, USB, Vertical PCB Mount,Type B	JA97	690-004-660-023(RoHS)	31781
J03	Conn, Socket, D-Sub, 9-Pin,Vertical PWB	JS50	164A16669X	C3057
S01	Switch, MOM, SPDT, PB, Black,No LED	SA70	5501M1BLKX	OUA4U
S02	Switch, MOM, SPDT, PB, Black,No LED	SA70	5501M1BLKX	OUA4U
S03	Switch, MOM, SPDT, PB, Black,No LED	SA70	5501M1BLKX	OUA4U
S04	Switch, MOM, SPDT, PB, Black,No LED	SA70	5501M1BLKX	OUA4U
S05	Switch, MOM, SPDT, PB, Black,LED-Red	SA68	5501MBLKRED	OUA4U
S06	Switch, MOM, SPDT, PB, Black,LED-Green	SA69	5501MBLKGRN	OUA4U
S07	Switch, MOM, SPDT, PB, Black,LED-Green	SA69	5501MBLKGRN	OUA4U
S08	Switch, MOM, SPDT, PB, REDNo LED	SA71	5501MREDX	OUA4U

NAPX40 LED PWB Assy - NOAA

REFDES	DESCRIPTION	NAUTEL #	VENDOR #	OEM CODE
DS01	Diode, LED, Bicolor, Red & Green	QM16	SSL-LX5093IGW	1EM90
DS02	Diode, LED, Bicolor, Red & Green	QM16	SSL-LX5093IGW	1EM90
DS03	Diode, LED, Bicolor, Red & Green	QM16	SSL-LX5093IGW	1EM90
J01	Conn, Header, Ribbon Cbl, 10-Pin	JQ54	103308-1	00779

NAPX41 Combiner, LPF, Probe PWB Assy (1250W) - NOAA

REFDES	DESCRIPTION	NAUTEL #	VENDOR #	OEM CODE
C01	Not Used	-	NOT USED	37338
C02	Capacitor, SMT, Porcelain,39pF 500V, 2%	CS90	1111P390GW501X	29990
C03	Not Used	-	NOT USED	37338
C04	Capacitor, SMT, Porcelain,39pF 500V, 2%	CS90	1111P390GW501X	29990
L01	Installed at Next Higher Assy	+	INSTALLED AT NEXT HIGHER ASSY	37338
L02	Installed at Next Higher Assy	+	INSTALLED AT NEXT HIGHER ASSY	37338
L03	Installed at Next Higher Assy	+	INSTALLED AT NEXT HIGHER ASSY	37338
L04	Installed at Next Higher Assy	+	INSTALLED AT NEXT HIGHER ASSY	37338
L05	Installed at Next Higher Assy	+	INSTALLED AT NEXT HIGHER ASSY	37338
R01	Installed at Next Higher Assy	+	INSTALLED AT NEXT HIGHER ASSY	37338
R02	Installed at Next Higher Assy	+	INSTALLED AT NEXT HIGHER ASSY	37338
R03	Installed at Next Higher Assy	+	INSTALLED AT NEXT HIGHER ASSY	37338
R04	Installed at Next Higher Assy	+	INSTALLED AT NEXT HIGHER ASSY	37338
R05	Installed at Next Higher Assy	+	INSTALLED AT NEXT HIGHER ASSY	37338
R06	Installed at Next Higher Assy	+	INSTALLED AT NEXT HIGHER ASSY	37338
R07	Installed at Next Higher Assy	+	INSTALLED AT NEXT HIGHER ASSY	37338
R08	Installed at Next Higher Assy	+	INSTALLED AT NEXT HIGHER ASSY	37338
R09	Installed at Next Higher Assy	+	INSTALLED AT NEXT HIGHER ASSY	37338
R10	Resistor, SMT, MF, 49.9 Ohms,1% 1/4W	RAE21	RK73H2BL49R9F	59124

1250W VHF XMTR Assy - NOAA

REFDES	DESCRIPTION	NAUTEL #	VENDOR #	OEM CODE
A01	Exciter/Control PWB Assy-NOAA	NAPE82	216-3050	37338
A02	PS Distribution PWB Assy(Dual) - NOAA	NAPI124	216-7150	37338
A03	PWB Detail, Interface	PR17A	216-4151	37338
A04	Splitter PWB Assy - NOAA	NAPI127	216-1150	37338
A05	Combiner, LPF, Probe PWB Assy (1250W) - NOAA	NAPX41	216-5070	37338
A06	Combiner Interface PWB Assy,NOAA	NAPI132	216-4160	37338
A07	LED PWB Assy - NOAA	NAPX40	216-2050	37338
A08	Pre-Amp/IPA PWB Assy - NOAA	NAPA26	216-1190	37338
A09	PA PWB Assy, NOAA	NAPA24	216-1180	37338
A10	PA PWB Assy, NOAA	NAPA24	216-1180	37338
A11	PA PWB Assy, NOAA	NAPA24	216-1180	37338
A12	PA PWB Assy, NOAA	NAPA24	216-1180	37338
A13	PA PWB Assy, NOAA	NAPA24	216-1180	37338
A14	PA PWB Assy, NOAA	NAPA24	216-1180	37338
A15	PA PWB Assy, NOAA	NAPA24	216-1180	37338
A16	PA PWB Assy, NOAA	NAPA24	216-1180	37338
A5L1	Inductor Coil	216-5076	216-5076	37338
A5L2	Inductor Coil	216-5076	216-5076	37338
A5L3	Inductor Coil	216-5076	216-5076	37338
A5L4	Common Point Inductor	216-5078	216-5078	37338
A5L5	Common Point Inductor	216-5078	216-5078	37338
A5R1	Res,(BeO),50 ohms,5%,250W,0.25" tabs,Flng Mt.	RT52	BEO250B-R12	37338
A5R2	Res,(BeO),50 ohms,5%,250W,0.25" tabs,Flng Mt.	RT52	BEO250B-R12	37338
A5R3	Res,(BeO),50 ohms,5%,250W,0.25" tabs,Flng Mt.	RT52	BEO250B-R12	37338
A5R4	Res,(BeO),50 ohms,5%,250W,0.25" tabs,Flng Mt.	RT52	BEO250B-R12	37338
A5R5	Res,(BeO),50 ohms,5%,250W,0.25" tabs,Flng Mt.	RT52	BEO250B-R12	37338
A5R6	Res,(BeO),50 ohms,5%,250W,0.25" tabs,Flng Mt.	RT52	BEO250B-R12	37338
A5R7	Res,(BeO),50 ohms,5%,250W,0.25" tabs,Flng Mt.	RT52	BEO250B-R12	37338
A5R8	Res,(BeO),50 ohms,5%,250W,0.25" tabs,Flng Mt.	RT52	BEO250B-R12	37338
A5R9	Res,(BeO),50 ohms,5%,250W,0.25" tabs,Flng Mt.	RT52	BEO250B-R12	37338
B01	NOAA Fan Assy	216-8011	216-8011	37338
B02	NOAA Fan Assy	216-8011	216-8011	37338
B03	NOAA Fan Assy	216-8011	216-8011	37338
B04	NOAA Fan Assy	216-8011	216-8011	37338
B05	NOAA Fan Assy	216-8011	216-8011	37338
C01	Capacitor, Feed-Thru, Ceramic, 1000pF	CBP08	54-713-001-102Z	55969
C02	Capacitor, Feed-Thru, Ceramic, 1000pF	CBP08	54-713-001-102Z	55969
C03	Capacitor, Feed-Thru, Ceramic, 1000pF	CBP08	54-713-001-102Z	55969
C04	Capacitor, Feed-Thru, Ceramic, 1000pF	CBP08	54-713-001-102Z	55969

Continued from previous page

NARF62 1250W VHF XMTR Assy - NOAA

REFDES	DESCRIPTION	NAUTEL #	VENDOR #	OEM CODE
C05	Capacitor, Feed-Thru, Ceramic, 1000pF	CBP08	54-713-001-102Z	55969
C06	Capacitor, Feed-Thru, Ceramic, 1000pF	CBP08	54-713-001-102Z	55969
C07	Capacitor, Feed-Thru, Ceramic, 1000pF	CBP08	54-713-001-102Z	55969
C08	Capacitor, Feed-Thru, Ceramic, 1000pF	CBP08	54-713-001-102Z	55969
C09	Capacitor, Feed-Thru, Ceramic, 1000pF	CBP08	54-713-001-102Z	55969
J01	Conn, Coax, Recept, 7/16 DIN,Panel,50ohm	JA44	716-24	02660
S01	Circuit Breaker, 240V, 20A,Thermal, 2-Pole No release	SB65	TA45-ABDBF200C0	61935
U01	Conn,Recept,AC,250V,20A,Quick-Dis	JT80	83030400(RoHS)	INTERPOW
U02	Power Supply,48V,480W,Univ.Input,PFC, Rem ON/OFF	UG54	SP-480-48	SL575
U03	Power Supply, 7-53V, 2000W, 50A, 180-264Vac	UG69A	011-1509A1-1	
U04	Power Supply, 7-53V, 2000W, 50A, 180-264Vac	UG69A	011-1509A1-1	

NARF63 Final Assy NG1000 - NOAA

REFDES	DESCRIPTION	NAUTEL #	VENDOR #	OEM CODE
A01	System Controller Assy - NOAA	NAX251	216-5000	37338
A02	1250W VHF XMTR Assy - NOAA	NARF62	216-8100	37338
A03	1250W VHF XMTR Assy - NOAA	NARF62	216-8100	37338
A04	Directional Coupler Assy -NG1000	NAFP111	216-6600	37338
A05	AC Distribution Assy (NG1000)	216-7020	216-7020	37338
A06	AC Distribution Assy (NG1000)	216-7020	216-7020	37338
U01	Relay, RF Coaxial, Transfer, 4-Port, 12V, 7/16 DIN-F	KC78	RTL-SR033	
U02	Filter, NOAA, 1250W,162.475MHz 7/16 DIN-F No Mounting Bars	UM80	64A12/SBCHF	
U03	Dummy Load,Oil,1.5kW,50 ohm,7/16DIN	DA98	8860 c/w 4240-344	70998
U04	Data Line Protector, 2-wire,25V, 5 ohm Rs	UE60	DLP-10G-25V5	
U05	Modem, Industrial, V.92 Data/Fax	UW66	MT5634IND	62959
U06	Remote Off-Air Monitoring System	UX134	MU 103B	
U07	Power Supply, 9V, 300mA, 120VAC, Wall Mount	UG84	WT45-757	
U08	Surge Arrestor, Network Interface Device, Single Pair	UE62	325-1M-NIZS	

System Controller Assy - NOAA

REFDES	DESCRIPTION	NAUTEL #	VENDOR #	OEM CODE
A01	System Controller PWB Assy -NOAA	NAPC157	216-3020	37338
A02	Button/LED PWB Assy - NOAA	NAPX39	216-2040	37338
T01	Transformer Assy - NOAA	216-5008	216-5008	37338
T02	Transformer Assy - NOAA	216-5008	216-5008	37338
U01	AC Power Entrance,c/w 5A Circuit Brkr	UC56	6145ABDBF050CO.001	61935
U02	AC Power Entrance,c/w 5A Circuit Brkr	UC56	6145ABDBF050CO.001	61935
U03	Display, 4x20 character VFD,5V	UW118	M0420SD-204MDAR1-C(STATIC)(RoHS)	

Section 3: Wiring/connector lists

This section contains the wiring information for the hard-wired assemblies of the transmitter, and applicable connector mating information.

Wiring lists provided

Wiring lists are provided in tabular format. Table 3.1 on page 3-2 lists the tables containing wiring information. These tables provide non-printed wiring pattern, point-to-point (source and destination) interconnection information.

Wiring lists not provided

Separate wiring lists are not provided for some assemblies, including:

- Assemblies that have a separate maintenance manual. Refer to the appropriate maintenance manual for detailed wiring information for these assemblies, if provided.
- Assemblies that have their wiring information shown in tables on their assembly detail drawing(s). Refer to the *Mechanical Drawings* section of this manual for detailed wiring information for these assemblies.

Connector mating information

Where applicable, a connector mating table is provided after the corresponding wiring list. Table 3.2 on page 3-2 identifies all provided connector information.

Wire colours

Every effort is made to manufacture assemblies using the wire colour shown in the **Colour** column of the wiring list tables. Sometimes, a white wire will be substituted for the listed colour. In such cases, wires must be identified by their assigned numbers.

Printed wiring board patterns

Printed wiring pattern information for printed wiring boards (PWBs) is beyond the scope of this manual, and therefore not provided.

Table 3.1: Wiring Lists Provided

Table #	Description
Table 3.3	Wiring List - NG1000 Transmitter System (page 3-2)
Table 3.5	Wiring List - NAX251 System Controller (page 3-5)
Table 3.7	Wiring List - NARF62 VHF Transmitter, 1250 W (page 3-6)
Table 3.9	Wiring List - Ac Distribution Assembly (Nautel Part # 216-7020) (page 3-9)

Table 3.2: Connector Mating Information Provided

Table #	Description
Table 3.4	Connector Mating Information - NG1000 Transmitter System (page 3-3)
Table 3.6	Connector Mating Information - NAX251 System Controller (page 3-5)
Table 3.8	Connector Mating Information - NARF62 VHF Transmitter, 375 W (page 3-8)

Table 3.3: Wiring List - NG1000 Transmitter System

Source	Destination	Wire #	Colour	Size	Remarks
E1	A4E1	101	Black	6	SRG
P7-1	P8-Center	-	Black	22	
P7-2	P8-Gnd	-	Black	22	
P1-1	P2-1	102	White	22	2 Conductor
P1-3	P2-3	102	Black	22	Shielded
P1-2	P2-2	102	Shield	-	
P3-1	P4-1	103	White	22	2 Conductor
P3-3	P4-3	103	Black	22	Shielded
P3-2	P4-2	103	Shield	-	
P5-1	P6-1	104	White	22	
P5-2	P6-2	105	White	22	
P5-3	P6-3	106	Black	22	
P5-4	P6-4	107	White	22	
P5-5	P6-5	108	White	22	

Table 3.3: Wiring List - NG1000 Transmitter System

Source	Destination	Wire #	Colour	Size	Remarks
P5-6	P6-6	109	White	22	
P5-7	P6-7	110	White	22	
P5-8	P6-8	111	White	22	
P11-1	U4TB2-1	112	White	22	2 Conductor
P11-3	U4TB2-2	112	Black	22	Shielded
P11-2	U4TB2-3	112	Shield	-	
E1	E4	113	Green/Yellow	14	SRG
E5	A5E4	114	Green/Yellow	14	
E6	A6E4	115	Green/Yellow	14	
E2	E3	-	Black	10	Jumper (Door Gnd)
P9-1	RT1-A	-	-	-	RX07
P9-2	RT1-B	-	-	-	RX07
P12-1	P12-2	-	-	24	Jumper
P14-1	P14-2	-	-	24	Jumper
U8TB1-2	P16-3	116	Red	24	4 Conductor
U8TB1-1	P16-4	116	Green	22	4 Conductor
U8TB1-2	P16-3	117	Red	24	4 Conductor
U8TB1-1	P16-4	117	Green	22	4 Conductor
U8-G	E7	118	Green/Yellow	14	

Table 3.4: Connector Mating Information - NG1000 Transmitter System

Connector	Mate	Remarks
P1	A1A1J4	
P2	A2A1J5	
P3	A1A1J5	
P4	A3A1J5	
P5	A1A1J11B	
P6	U6-I/O Connector	
P7	A1A1J12	
P8	U5-DC INPUT	P8 is on AC/DC adapter cable supplied with U5.
P9	A1A1J2	
P10	A1A1J1	
P11	A1A1J3	
P12	A2A1J4	Red tape
P13	A2A1J6	Yellow tape

Table 3.4: Connector Mating Information - NG1000 Transmitter System

Connector	Mate	Remarks
P14	A3A1J4	Red tape
P15	A3A1J6	Yellow tape
P16	U5-Telephone Jack	
U7P1	A5J3	Ac plug end
U7P2	U6-Power	Dc plug end
W1P1	A1A1J9A	
W1P2	A2A1J2	
W2P1	A1A1J9B	
W2P2	A3A1J2	
W3P1	A1A1J10A	
W3P2	U1J1	
W4P1	A1A1J10B	W4 is supplied with U5. Label W4 at Final Assy.
W4P2	U5-DB9	W4 is supplied with U5. Label W4 at Final Assy.
W5P1	A2J1	
W5P2	U1-3	
W6P1	A3J1	
W6P2	U1-2	
W7P1	U1-1	
W7P2	U2-INPUT	
W8P1	U1-4	
W8P2	U3J1	
W9P1	A4A1J1	
W9P2	A1A1J6	
W10P1	A4A1J2	
W10P2	A1A1J7	
W11P1	A5J1	
W11P2	A2U1	
W12P1	A6J1	
W12P2	A3U1	
W13P1	A5J2	
W13P2	A1U1	
W14P1	A6J2	
W14P2	A1U2	
W15P1	A5J4	W15 is part of U2 (fan ac cord)
W15P2	U2-Fan	W15 is part of U2

Table 3.5: Wiring List - NAX251 System Controller

Source	Destination	Wire #	Colour	Size	Remarks
P1	E1	1	Grn/Yel	14	
P2	E1	2	Grn/Yel	14	

Table 3.6: Connector Mating Information - NAX251 System Controller

Connector	Mate
P1	U1-E
P2	U2-E
T1P1	A1J16
T1P2	U1-3
T1P3	U1-4
T2P1	A1J17
T2P2	U2-3
T2P3	U2-4
W1P1	A1J13
W1P2	A2J1
W2P1	A1J15
W2P2	U3J1

Table 3.7: Wiring List - NARF62 VHF Transmitter, 1250 W

Source	Destination	Wire #	Colour	Size	Remarks
P1	P3	1	White	14	
P2	P4	2	White	14	
U1-E (GND)	E1	3	Grn/Yel	14	
P5	P7	4	White	14	
P6	P8	5	White	14	
E1	P9	6	Grn/Yel	14	
P5	U2-L	7	White	14	
P6	U2-N	8	White	14	
E1	U2-G	9	Grn/Yel	14	
P7	P10	10	White	14	
P8	P11	11	White	14	
E1	P12	12	Grn/Yel	14	
U2-(+V)	A2TB1-6	13	White	16	
U2-(-V)	E2	14	Black	16	
A2TB2-5	C9-A	15	White	16	
A2TB2-1	C2-A	16	White	16	
A2TB2-2	C4-A	17	White	16	
A2TB2-3	C6-A	18	White	16	
A2TB2-4	C8-A	19	White	16	
A2TB1-1	C1-A	20	White	16	
A2TB1-2	C3-A	21	White	16	
A2TB1-3	C5-A	22	White	16	
A2TB1-4	C7-A	23	White	16	
P13-Center	A4-GG	24	Conductor		50 ohm coax cable
P13-Shield	A4-HH	24	Shield	-	
A5-R	A4-PP	25	Conductor		50 ohm coax cable
A5-S	A4-NN	25	Shield	-	
A5-T	J2-Center	26	Conductor		50 ohm coax cable
A5-U	J2-Shield	26	Shield	-	
C9-B	A8-E	27	White	16	
C1-B	A9-B	28	White	16	
C2-B	A10-B	29	White	16	
C3-B	A11-B	30	White	16	
C4-B	A12-B	31	White	16	
C5-B	A13-B	32	White	16	
C6-B	A14-B	33	White	16	

Table 3.7: Wiring List - NARF62 VHF Transmitter, 1250 W

Source	Destination	Wire #	Colour	Size	Remarks
C7-B	A15-B	34	White	16	
C8-B	A16-B	35	White	16	
A4-EE	A8-D	-	White	22	Jumper
A4-A	A8-A	-	-	24	Jumper
A4-B	A8-B	-	-	24	Jumper
A4-C	A8-C	-	-	24	Jumper
A8-F	A5-J	-	-	20	Jumper
A4-F	A9-A	-	-	24	Jumper
A4-J	A10-A	-	-	24	Jumper
A4-M	A11-A	-	-	24	Jumper
A4-Q	A12-A	-	-	24	Jumper
A4-T	A13-A	-	-	24	Jumper
A4-W	A14-A	-	-	24	Jumper
A4-Z	A15-A	-	-	24	Jumper
A4-CC	A16-A	-	-	24	Jumper
A4-H	A9-E	-	-	24	Jumper
A4-L	A10-E	-	-	24	Jumper
A4-P	A11-E	-	-	24	Jumper
A4-S	A12-E	-	-	24	Jumper
A4-V	A13-E	-	-	24	Jumper
A4-Y	A14-E	-	-	24	Jumper
A4-BB	A15-E	-	-	24	Jumper
A4-G	A9-F	-	-	24	Jumper
A4-K	A10-F	-	-	24	Jumper
A4-N	A11-F	-	-	24	Jumper
A4-R	A12-F	-	-	24	Jumper
A4-U	A13-F	-	-	24	Jumper
A4-X	A14-F	-	-	24	Jumper
A4-AA	A15-F	-	-	24	Jumper
A4-DD	A16-F	-	-	24	Jumper
A9-C	A5-H	-	-	20	Jumper
A10-C	A5-G	-	-	20	Jumper
A11-C	A5-F	-	-	20	Jumper
A12-C	A5-E	-	-	20	Jumper
A13-C	A5-D	-	-	20	Jumper
A14-C	A5-C	-	-	20	Jumper
A15-C	A5-B	-	-	20	Jumper

Table 3.7: Wiring List - NARF62 VHF Transmitter, 1250 W

Source	Destination	Wire #	Colour	Size	Remarks
A16-C	A5-A	-	-	20	Jumper
A5-P	A6-A	-	-	24	Jumper
A5-Q	A6-B	-	-	24	Jumper
A5-V	A6-C	-	-	24	Jumper
A5-W	A6-D	-	-	24	Jumper
A5-Y	J1-Center	-	-	10	Jumper

Table 3.8: Connector Mating Information - NARF62 VHF Transmitter, 1250 W

Connector	Mate
P1	U1-L
P2	U1-N
P3	S1-P1
P4	S1-P2
P5	S1-3
P6	S1-4
P7	A2E1
P8	A2E2
P9	A2E3
P10	A2E4
P11	A2E5
P12	A2E6
P13	A1J10
W1P1	A2J3
W1P2	A1J7
W2P1	A2J2
W2P2	A1J8
W3P1	A1J11
W3P2	A3P1
W4P1	A1J9
W4P2	A7J1
B1P1	A4J2
B2P1	A4J3
B3P1	A4J4
B4P1	A4J5
B5P1	A4J6

Table 3.9: Wiring List - Ac Distribution Assembly (Nautel Part # 216-7020)

Source	Destination	Wire #	Colour	Size	Remarks
TB1-1	J1-L	1	Red	14	
TB1-2	J1-L/N	2	Red	14	
TB1-4	E1	3	Grn/Yllw	14	
TB1-1	DS1-X1	4	Red	14	
TB1-2	DS1-X2	5	White	14	
TB1-1	J4-L (Gold)	6	Red	14	
TB1-3	J4-N (Tin)	7	White	14	
E2	J4-E (GND)	8	Grn/Yllw	14	
J4-L (Gold)	J2-L (Gold)	9	Red	14	
J4-N (Tin)	J2-N (Tin)	10	White	14	
E2	J2-E (GND)	11	Grn/Yllw	14	
TB1-1	J5-L (Gold)	12	Red	14	
TB1-3	J5-N (Tin)	13	White	14	
E3	J5-E (GND)	14	Grn/Yllw	14	
J5-L	J3-L (Gold)	15	Red	14	
J5-N	J3-N (Tin)	16	White	14	
E3	J3-E (GND)	17	Grn/Yllw	14	
E3	J1-E (GND)	18	Grn/Yllw	14	

Section 4: Reading Electrical Schematics

This section contains electrical schematics and logic diagrams for the transmitter. Block diagrams, simplified electrical schematics, and logic diagrams may be included. Refer to Table 4.1 on page 4-5 for an itemized listing.

Component values

Unless otherwise specified on the logic or schematic diagram, the following defaults apply:

- Resistor values are shown in ohms (K = 1,000 and M = 1,000,000)
- Resistor power ratings are not shown when less than 0.5 W
- Capacitor values are shown in microfarads (uF)
- Unidentified diodes are part number 1N4938 (Nautel Part # QAP29)

Graphic symbols

The graphic symbols used on electrical schematics are in accordance with *American National Standard ANSI Y32.2-1975 - Graphic Symbols for Electrical and Electronic Diagrams.*

Logic symbols

The logic symbols used on electrical schematics and logic diagrams are in accordance with *American National Standard ANSI Y32.14-1975 - Graphic Symbols for Logic Diagrams.*

Reference designations

Referenced designations were assigned in accordance with *American National Standard ANSI Y32.16-1975 - Reference Designations for Electrical and Electronic Parts and Equipment.*

Each electrical symbol is identified with its basic reference designation. To obtain the full reference designation for a specific part, prefix this basic identifier with the reference designation assigned to all higher assemblies. For example, the complete designation for a resistor (R1) on a printed wiring board (A1), that is part of a larger board (A2), would be A2A1R1.

Unique symbols

Nautel uses unique symbols on electrical schematics to describe logic (two-state) signals. These signals differ from single-state signals or analog signals that may have multiple values.

Type of inputs and outputs

On electrical schematics, names used to describe logic (two-state) input and output signals are prefixed with a # symbol.

Logic level convention

The # prefix identifies an input or output signal that has two distinct states: high and low.

The suffix on an input or output signal name identifies the *active* (true) state of the signal. The *high suffix* (+) indicates the more positive of the two levels used to represent the logic states. The *low suffix* (-) indicates the less positive of the two levels.

Two types of logic, positive and negative, may be represented on a particular schematic. In positive logic, high represents the *active* (true) state, and low represents the *inactive* (false) state. In negative logic, low represents the *active* (true) state, and high represents the *inactive* (false) state.

Identifying schematic diagrams

Each electrical schematic in this section is identified by a number that is both the figure number and the page number. The numbers are assigned sequentially are prefixed by the letters SD. The electrical schematics and logic diagrams included in this section are listed in Table 4.1 on page 4-5.

Structure of schematics

The electrical schematics are structured in a hierarchical format that is based on function and signal flow. Wherever practical, the signal flow is from left to right. Normally, inputs originate on the left-hand side and outputs extend to the right-hand side. Exceptions are shown by an arrow indicating the direction of signal flow.

> *Note: The physical location of a part or assembly was not necessarily a factor during creation of the schematic. The full reference designation assigned to a part or assembly, in conjunction with the family tree (see* Section 3, "Parts Lists" on page 3-1*) and the assembly detail drawings (see* Section 6, "Mechanical Drawings" on page 6-1*), will identify its location.*

Figures SD-1 through SD-3 identify each major stage and its detailed interconnection. Each stage contains cross-references that identify which blocks are the signal sources for inputs, or the destinations for outputs.

When a sub-function is treated as a block in figures SD-1 through SD-3, its detailed circuit information is included in its own schematic drawing(s), which is also included in this section.

Locating schematic diagram(s) for a functional block

The text inside a functional block provides the key to locating its schematic diagram(s).

1. When a functional block is assigned a reference designation (e.g., A1A1), refer to the family trees in Section 3, "Parts Lists" on page 3-1. Follow the family tree branches to the block that contains the desired reference designation, and associated Nautel nomenclature (e.g., NAPC157 System Controller PWB). Note the reference designations and Nautel nomenclatures of all higher assemblies in the path.
   Example: A1 NAX251 System Controller > A1A1 NAPC157 System Controller PWB.

2. Refer to Table 4.1 on page 4-5 and use the reference designation and Nautel nomenclature to identify the appropriate schematic diagram(s).
   Example: NAPC157 System Controller PWB is shown on schematics SD-4 through SD-6.

3. If necessary, refer to the referenced figure in the schematics at the end of this section and locate the next, lower-level assembly. Then, repeat this procedure until the desired schematic diagram is found.

Locating a part or assembly on a schematic

The full reference designation assigned to a part or assembly is the key to physically locating that part or assembly.

> *Note: Full reference designations contain the assembly hierarchical coding. When the end item is divided into units (cabinets), the first coding is a unit number (1, 2, 3, etc.). When the end item is divided into assemblies, the first coding is an assembly number (A1, A2, A3, etc.). If a unit or an assembly is divided into sub-assemblies, assembly coding that identifies assembly relationship (1A1, A2A1, A2A1A1, etc.) is added.*

1. Refer to the family trees in Section 3, "Parts Lists" on page 3-1.

2. Follow the family tree branches to the block that contains the desired reference designation, while noting the Nautel nomenclatures and names of all higher assemblies in the path.
   Example: A1 NAX251 System Controller > A1A1 NAPC157 System Controller PWB.

> *Note: The drawings in the* Mechanical Drawings *section depict the assembly detail of the transmitter and its modules and assemblies.*

3. Refer to Table 6.1 in Section 6, "Mechanical Drawings" on page 6-1. Use the Nautel nomenclature and name of each family tree block in the path, starting at the highest assembly – this is normally Figure MD-1 – to determine the figure number(s) for that assembly.
   Example: NAPC157 System Controller PWB is shown on MD-3.

4. Refer to the referenced figure (e.g., MD-3) in Section 6.1, "List of Mechanical Drawings" on page 6-2 to locate the desired part or assembly.

Table 4.1: List of Electrical Schematics

Figure #	Title
SD-1	NG1000 System - Ac Distribution (Sheet 1 of 2)
SD-2	NG1000 System - Transmitters and System Controller (Sheet 2 of 2)
SD-3	NAX251 System Controller
SD-4	NAPC157 System Controller PWB (Sheet 1 of 3)
SD-5	NAPC157 System Controller PWB (Sheet 2 of 3)
SD-6	NAPC157 System Controller PWB (Sheet 3 of 3)
SD-7	NARF62 VHF Transmitter, 1250 W (Sheet 1 of 2)
SD-8	NARF62 VHF Transmitter, 1250 W (Sheet 2 of 2)
SD-9	NAPE82 Exciter/Control PWB (Sheet 1 of 5)
SD-10	NAPE82 Exciter/Control PWB (Sheet 2 of 5)
SD-11	NAPE82 Exciter/Control PWB (Sheet 3 of 5)
SD-12	NAPE82 Exciter/Control PWB (Sheet 4 of 5)
SD-13	NAPE82 Exciter/Control PWB (Sheet 5 of 5)
SD-14	NAPI124 PS Distribution PWB (Dual)
SD-15	NAPI132 Combiner Interface PWB (1250 W)
SD-16	NAPA26 Pre-Amp/IPA PWB
SD-17	NAPA24 PA PWB

NG300 AC DISTRIBUTION

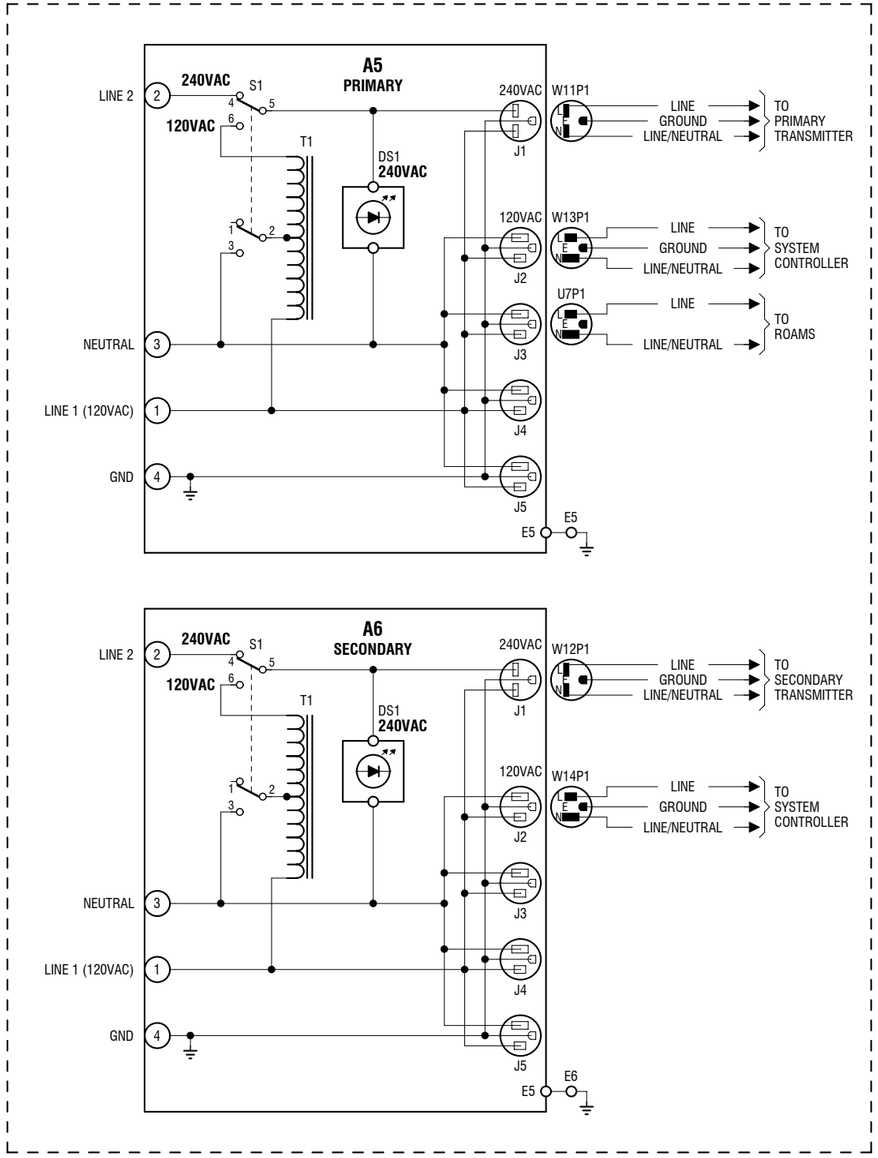

S2160013 V2

NG1000 AC DISTRIBUTION

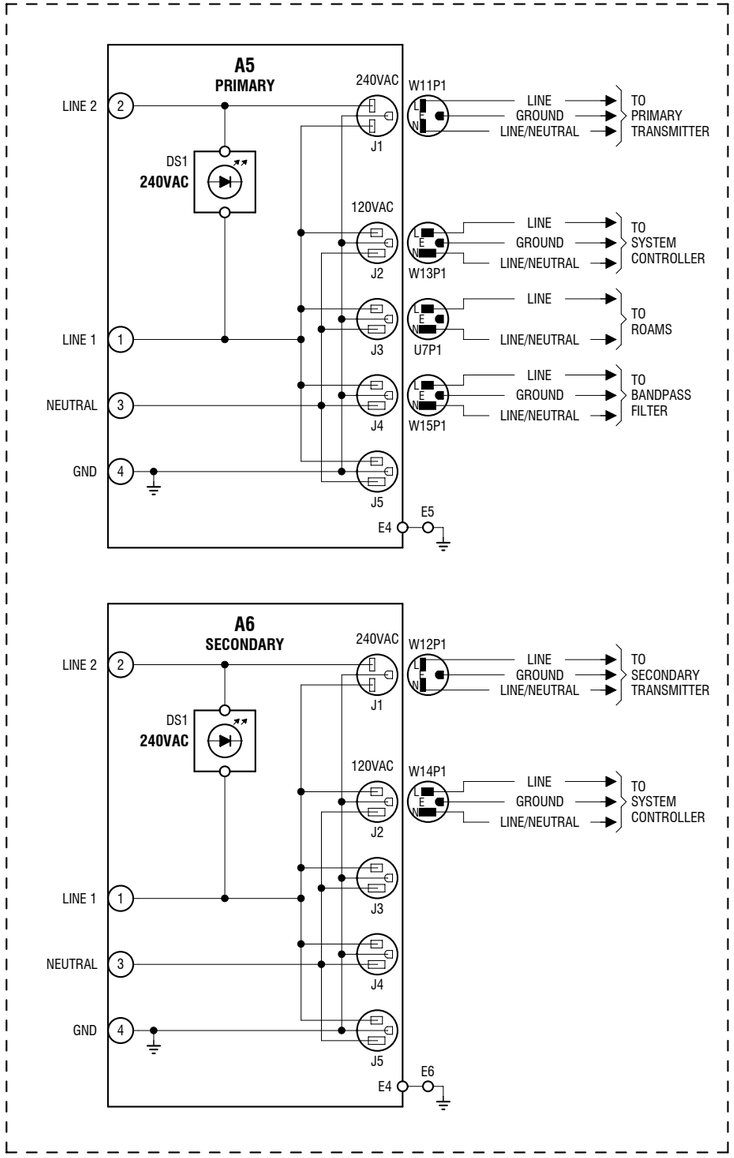

Figure SD-1: NG1000 System - Ac Distribution (Sheet 1 of 2)

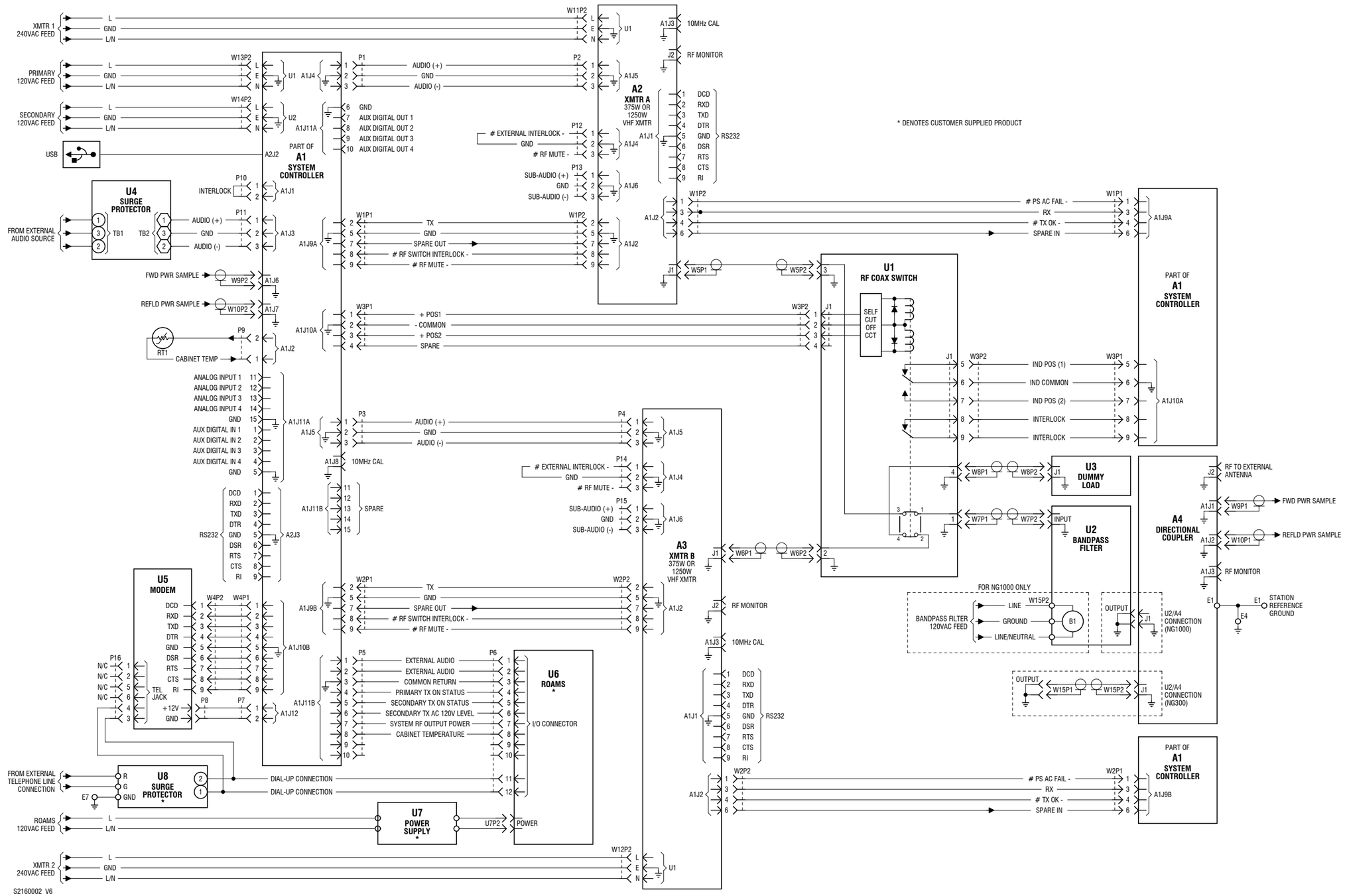

Figure SD-2: NG1000 System - Transmitters and System Controller (Sheet 2 of 2)

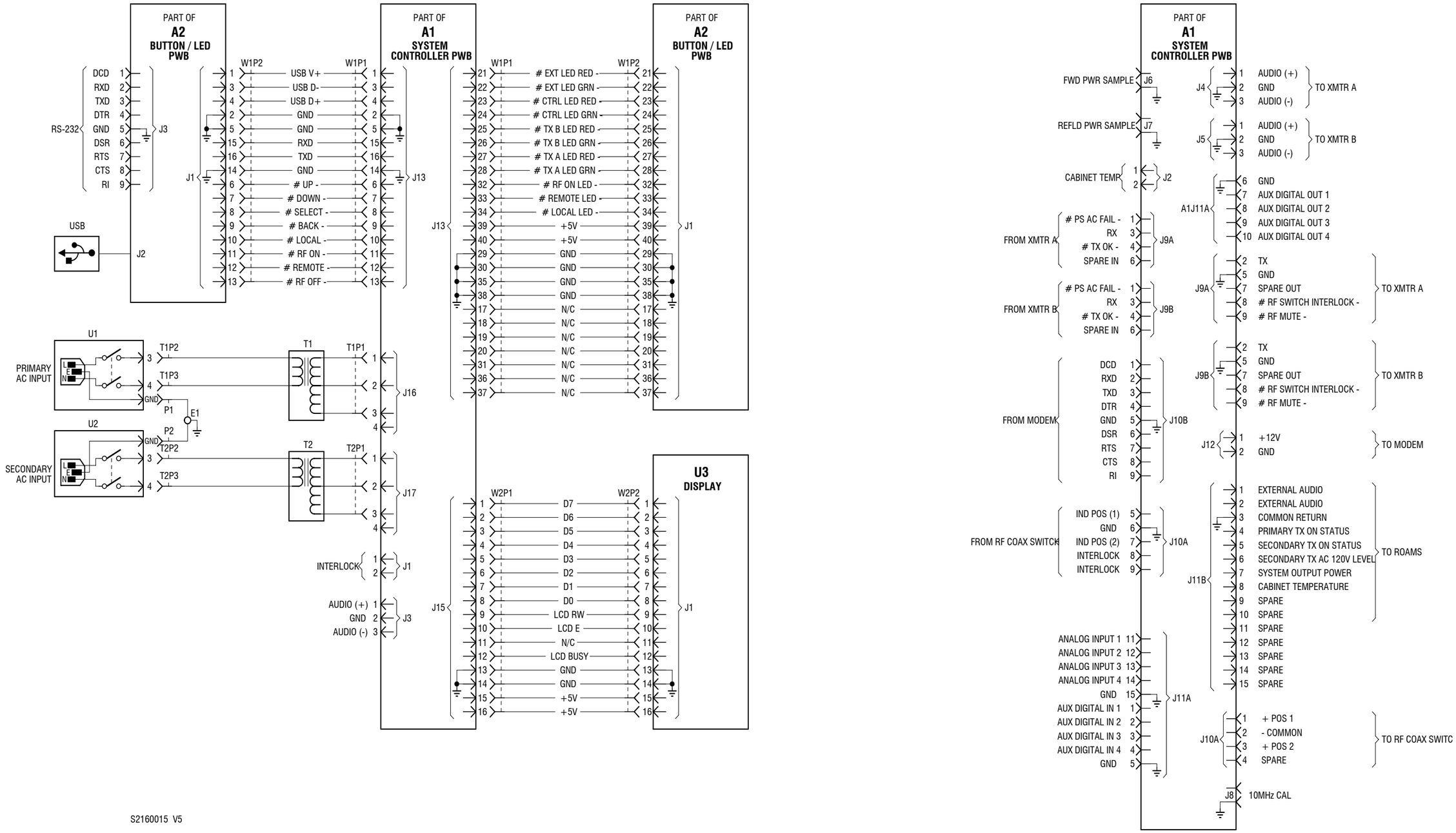

Figure SD-3: NAX251 System Controller

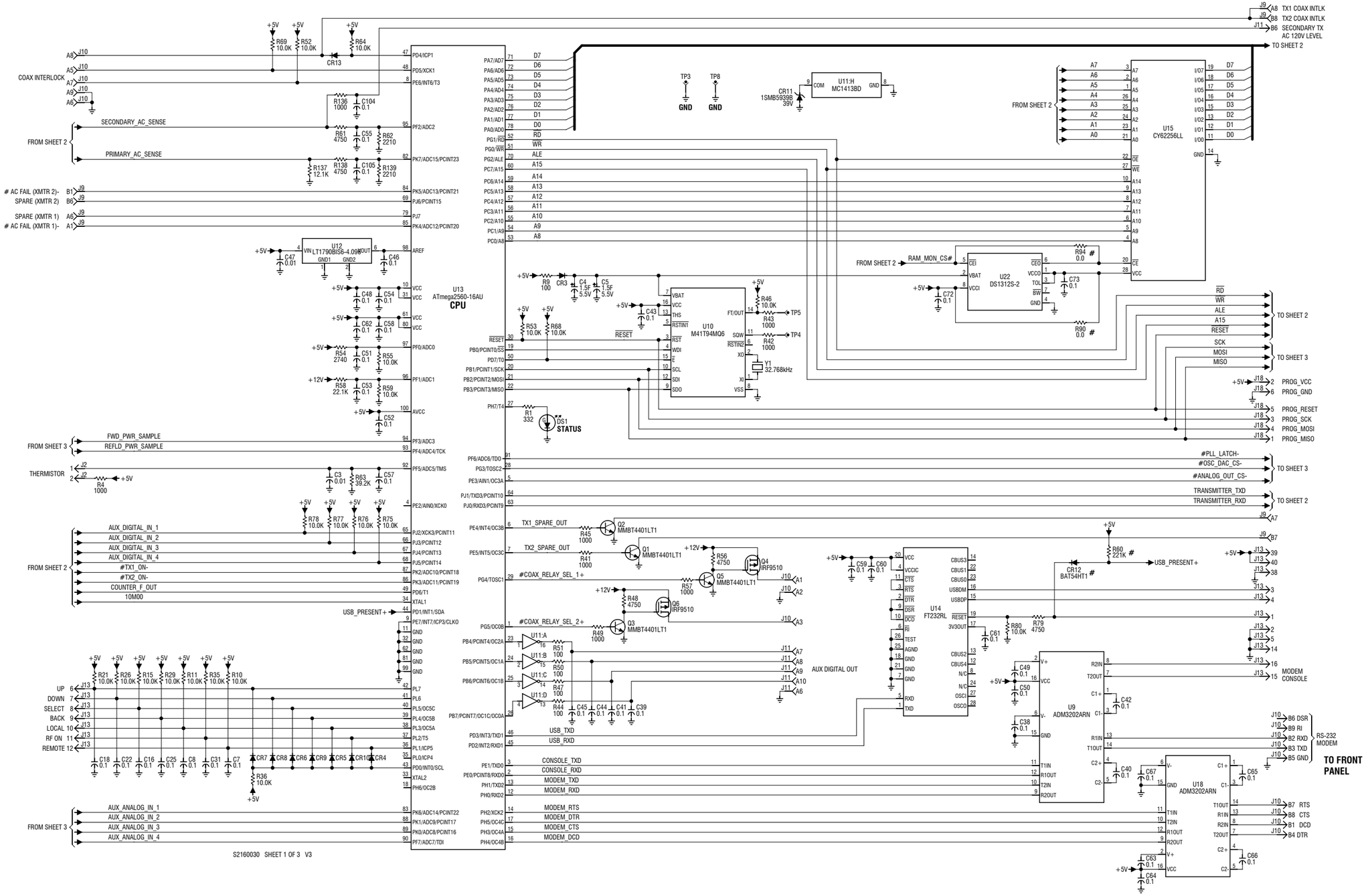

Figure SD-4: NAPC157 System Controller PWB (Sheet 1 of 3)

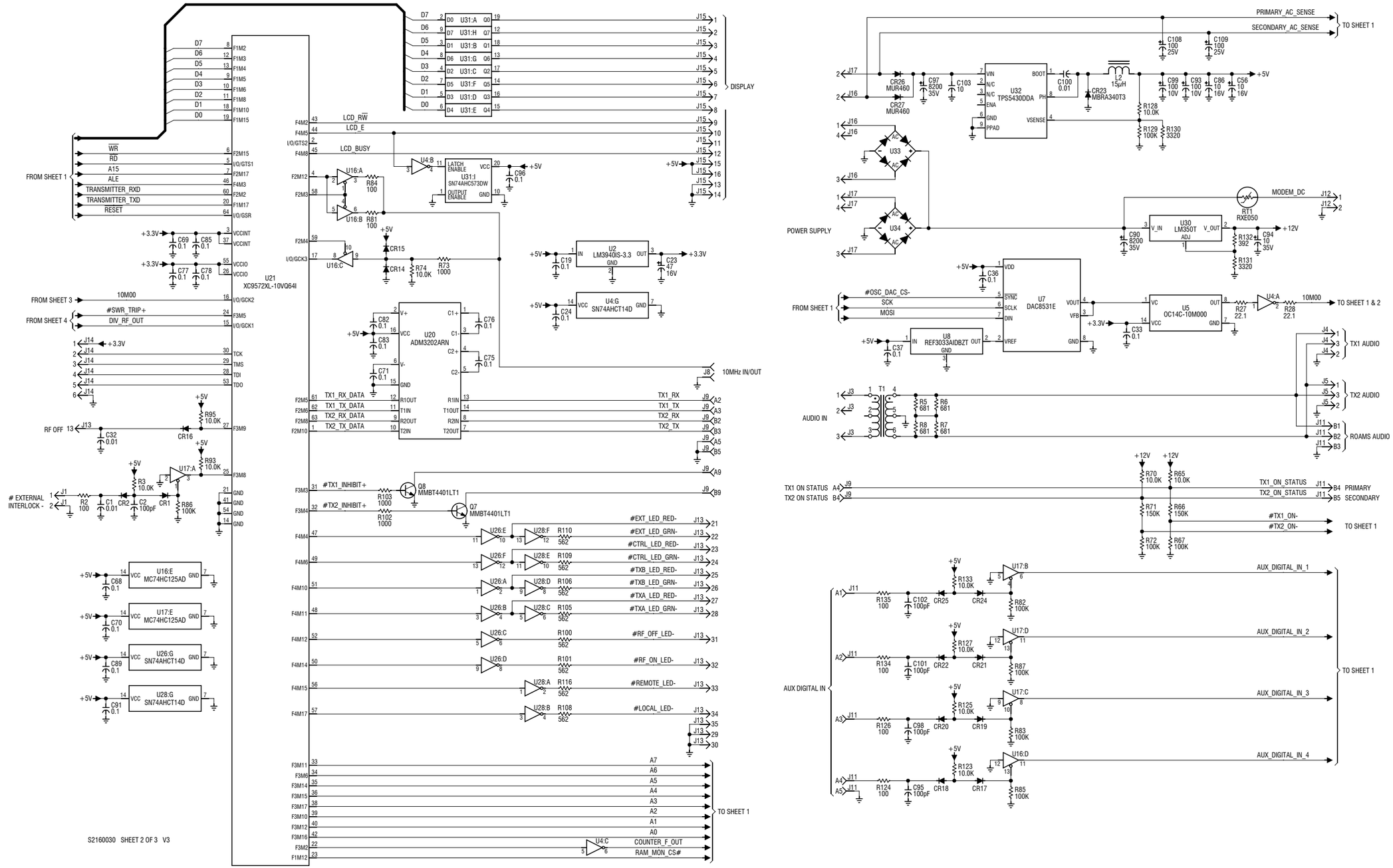

Figure SD-5: NAPC157 System Controller PWB (Sheet 2 of 3)

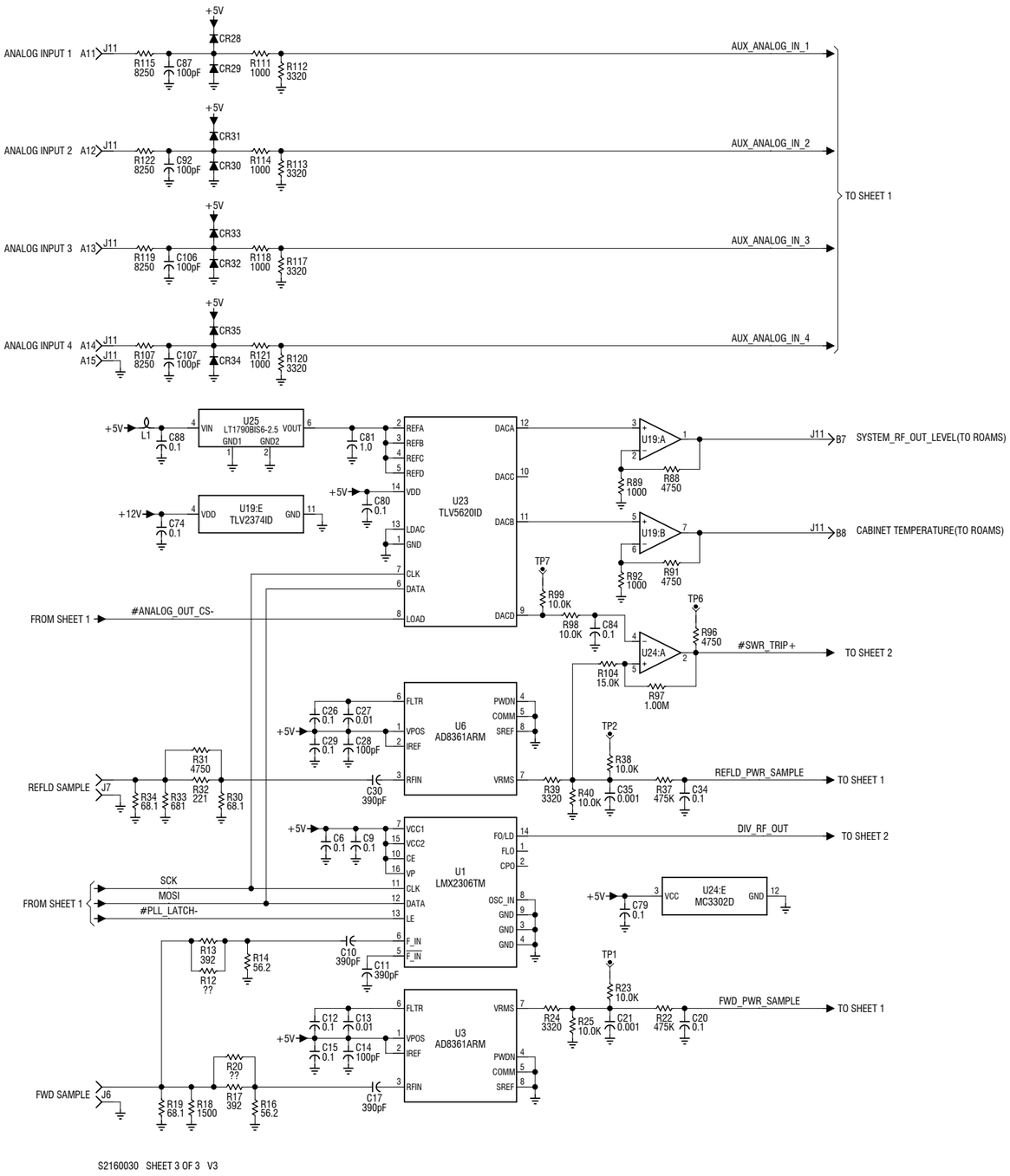

Figure SD-6: NAPC157 System Controller PWB (Sheet 3 of 3)

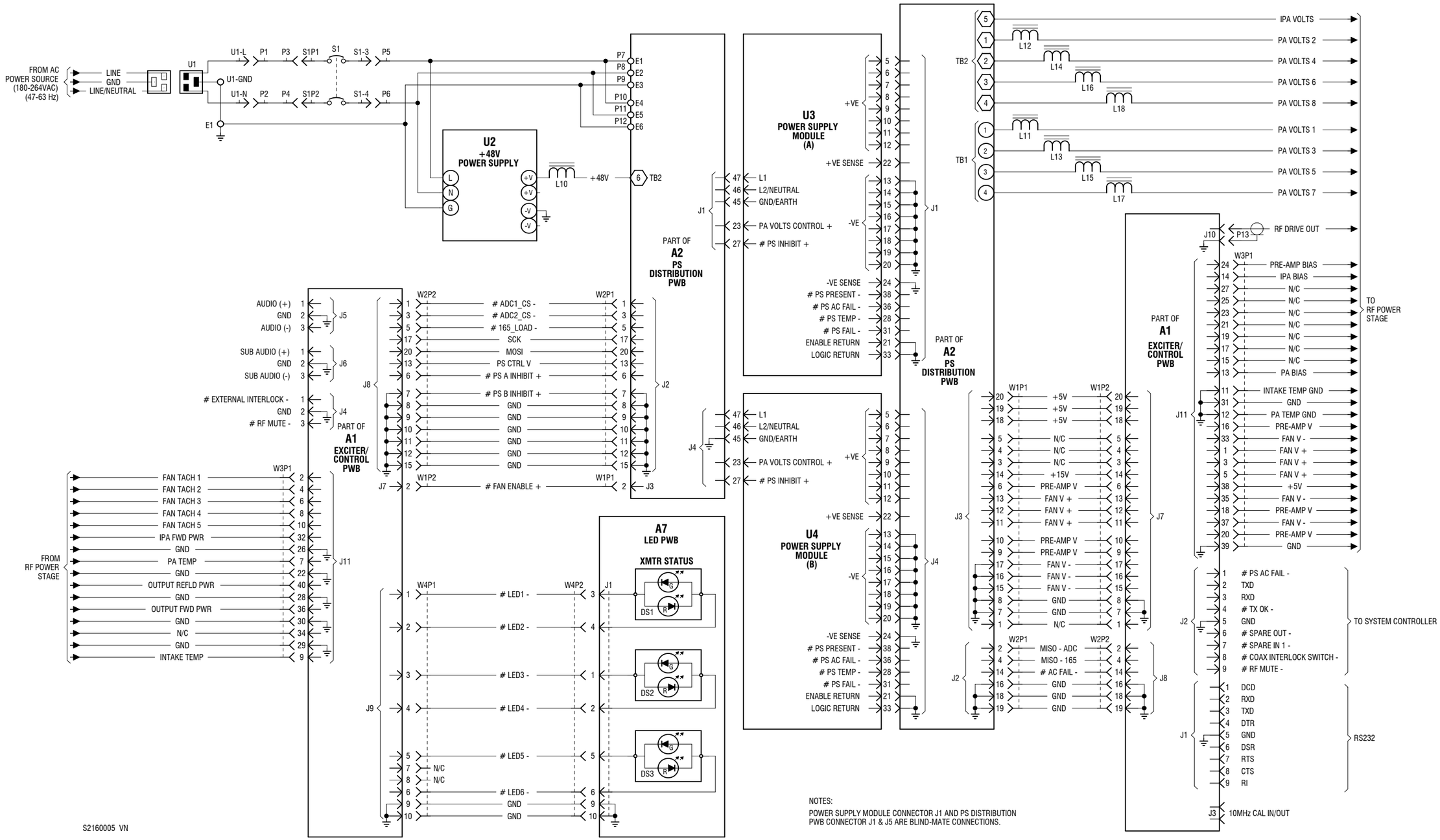

Figure SD-7: NARF62 VHF Transmitter, 1250 W (Sheet 1 of 2)

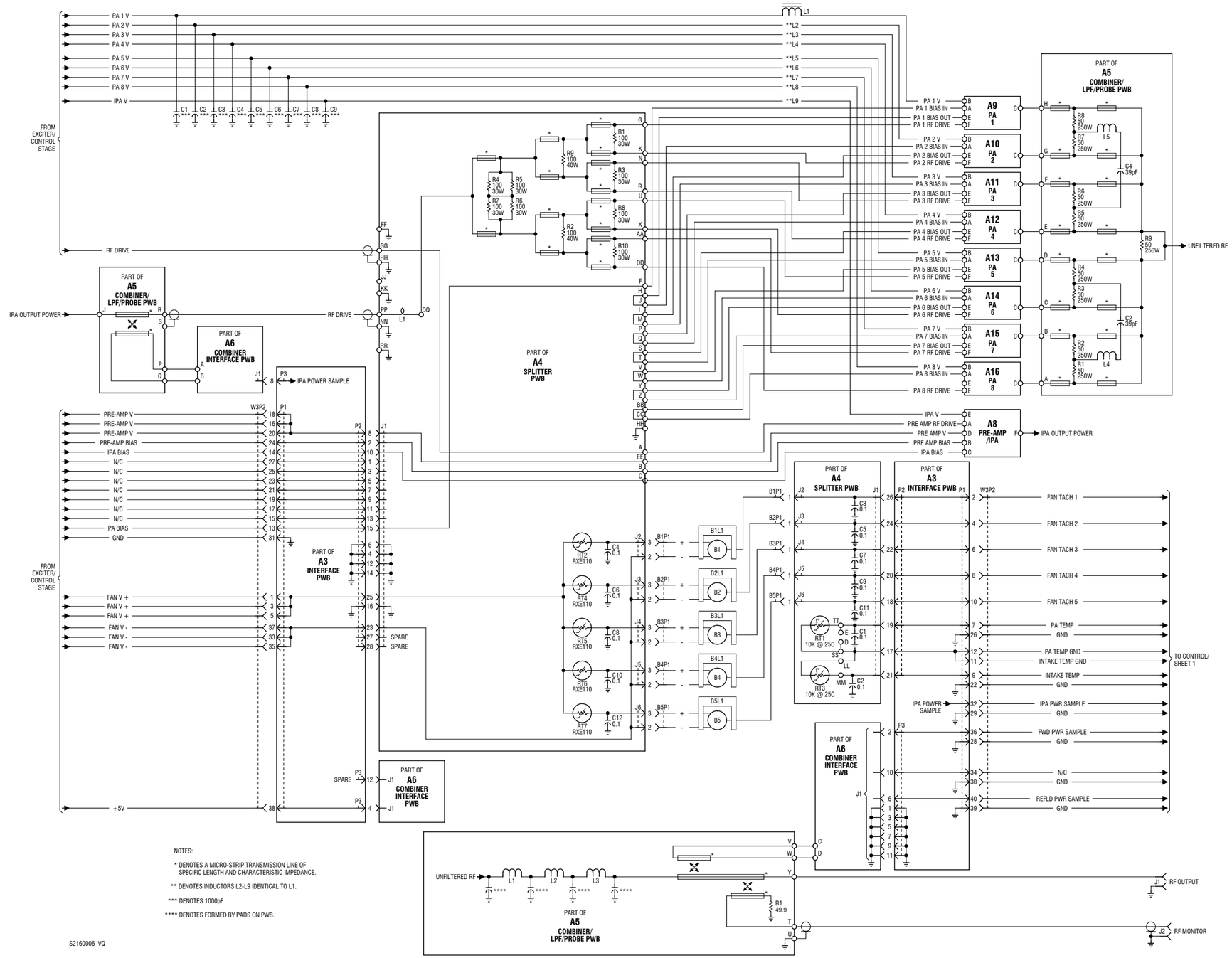

Figure SD-8: NARF62 VHF Transmitter, 1250 W (Sheet 2 of 2)

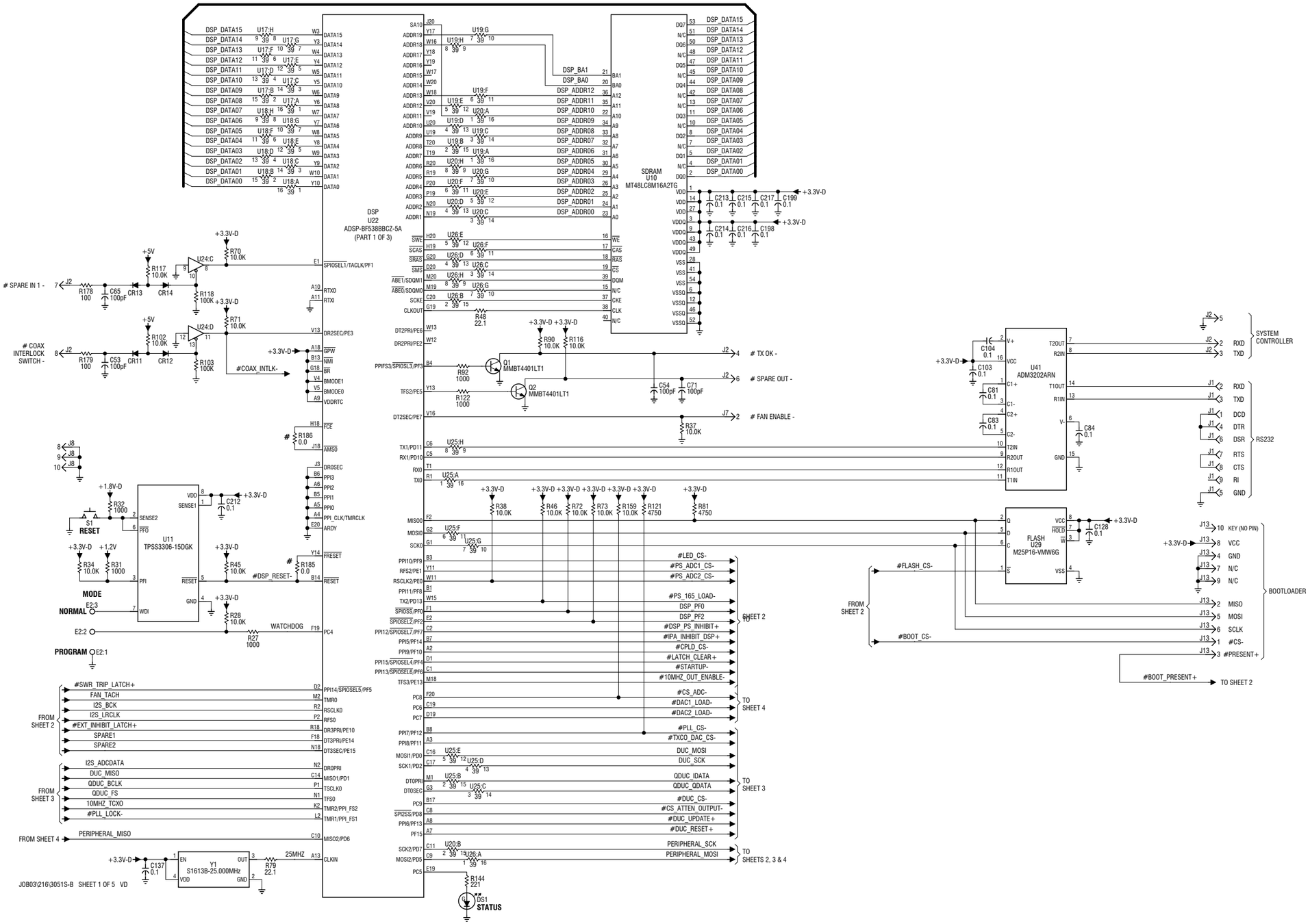

Figure SD-9: NAPE82 Exciter/Control PWB (Sheet 1 of 5)

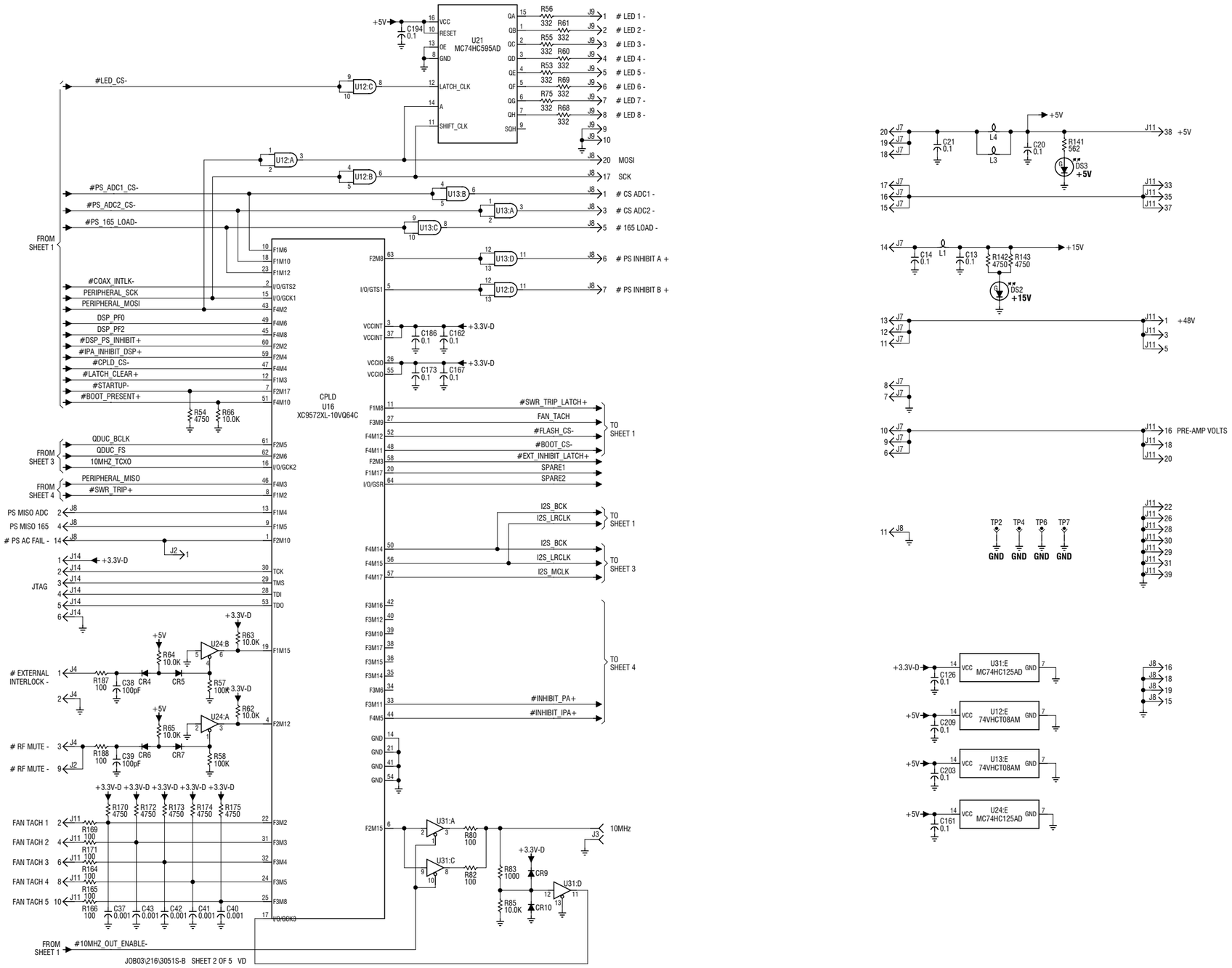

Figure SD-10: NAPE82 Exciter/Control PWB (Sheet 2 of 5)

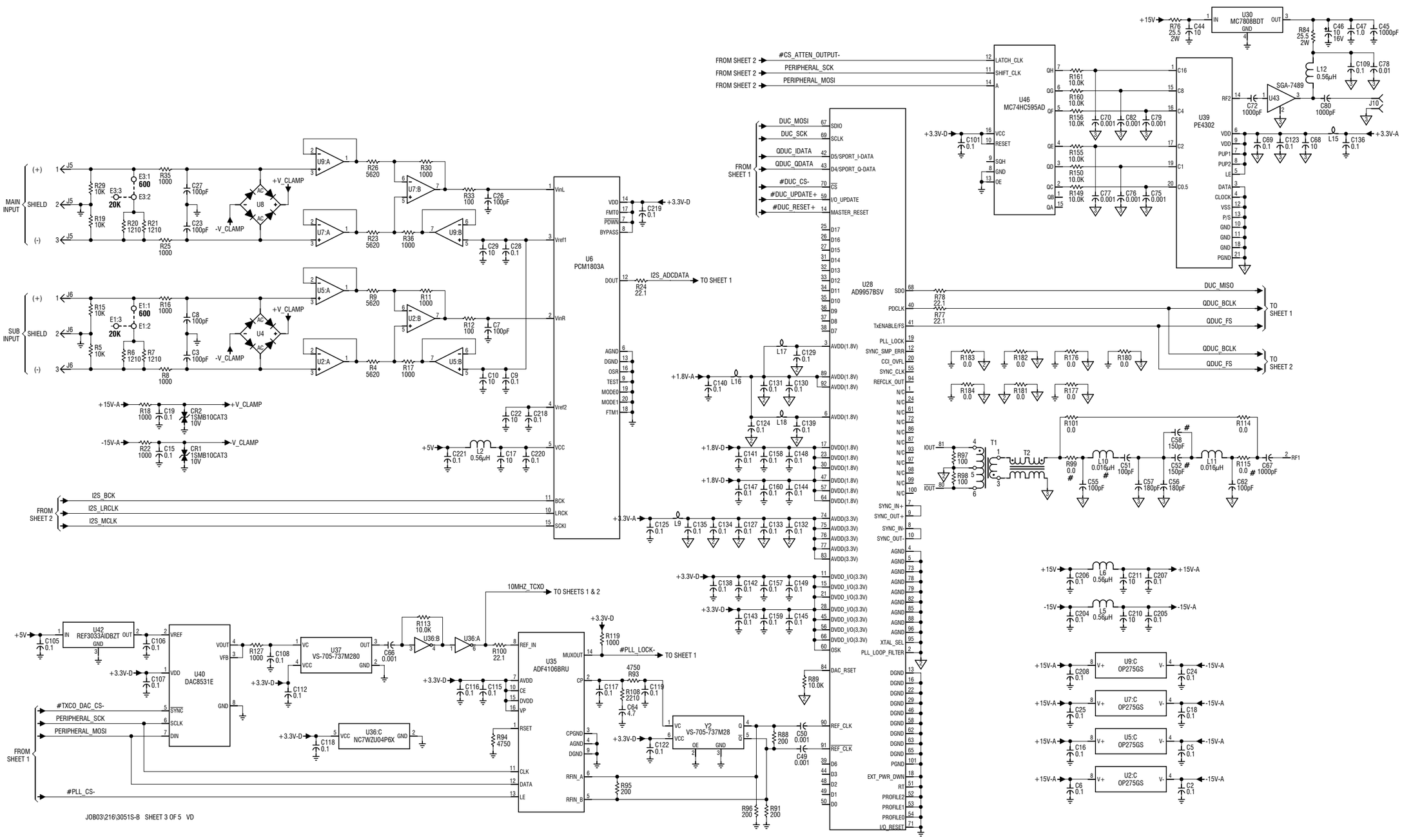

Figure SD-11: NAPE82 Exciter/Control PWB (Sheet 3 of 5)

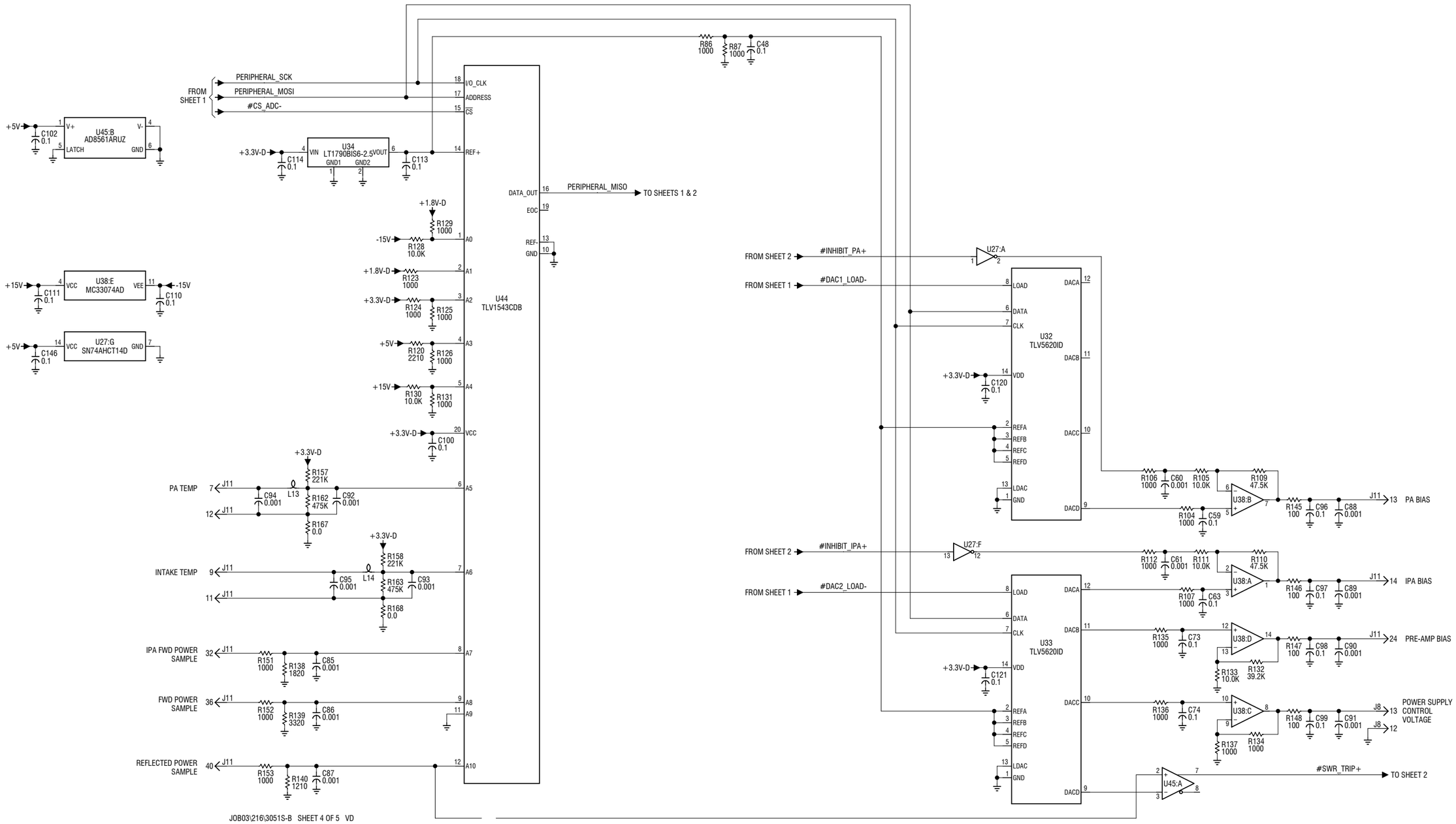

Figure SD-12: NAPE82 Exciter/Control PWB (Sheet 4 of 5)

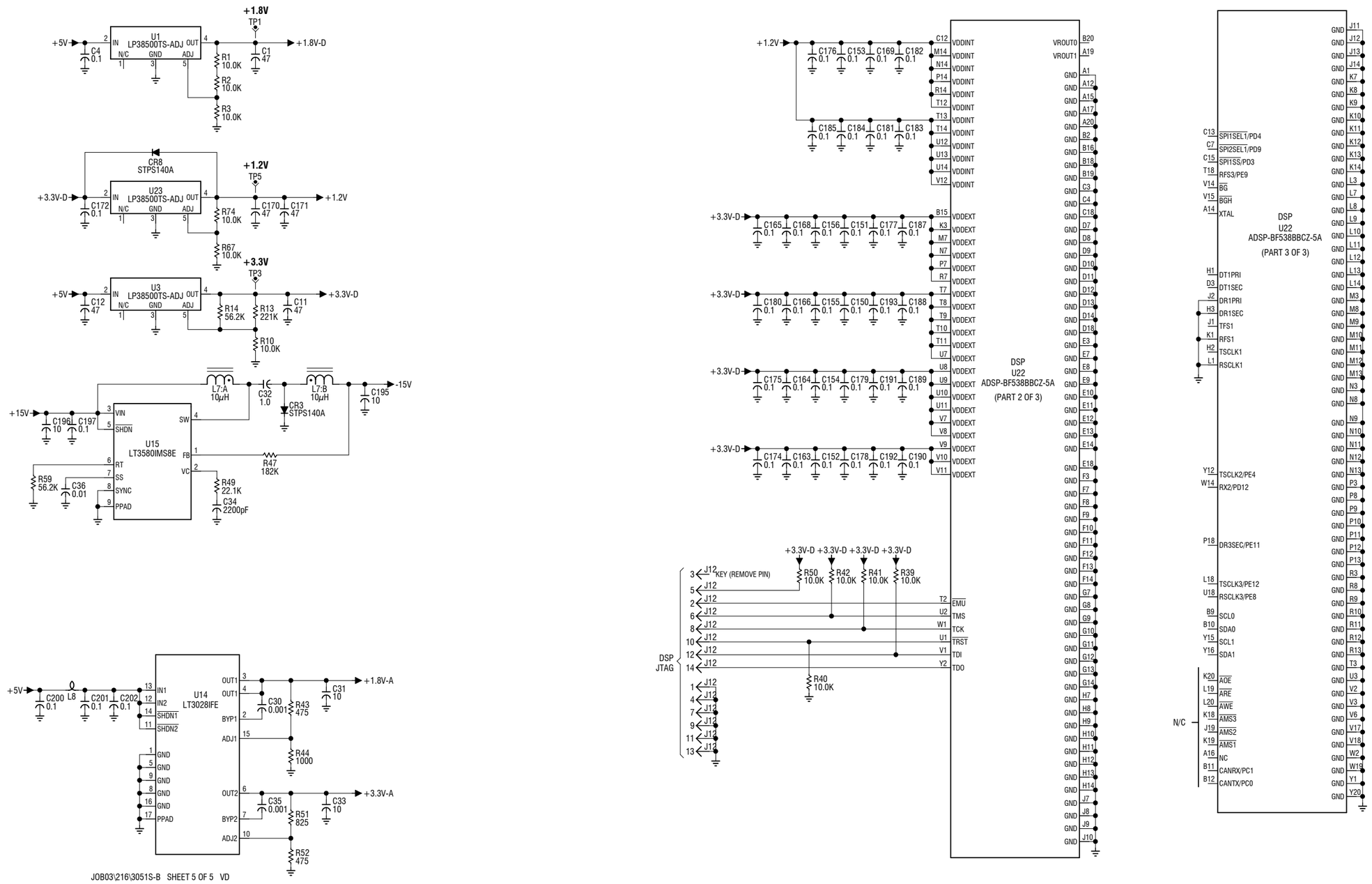

Figure SD-13: NAPE82 Exciter/Control PWB (Sheet 5 of 5)

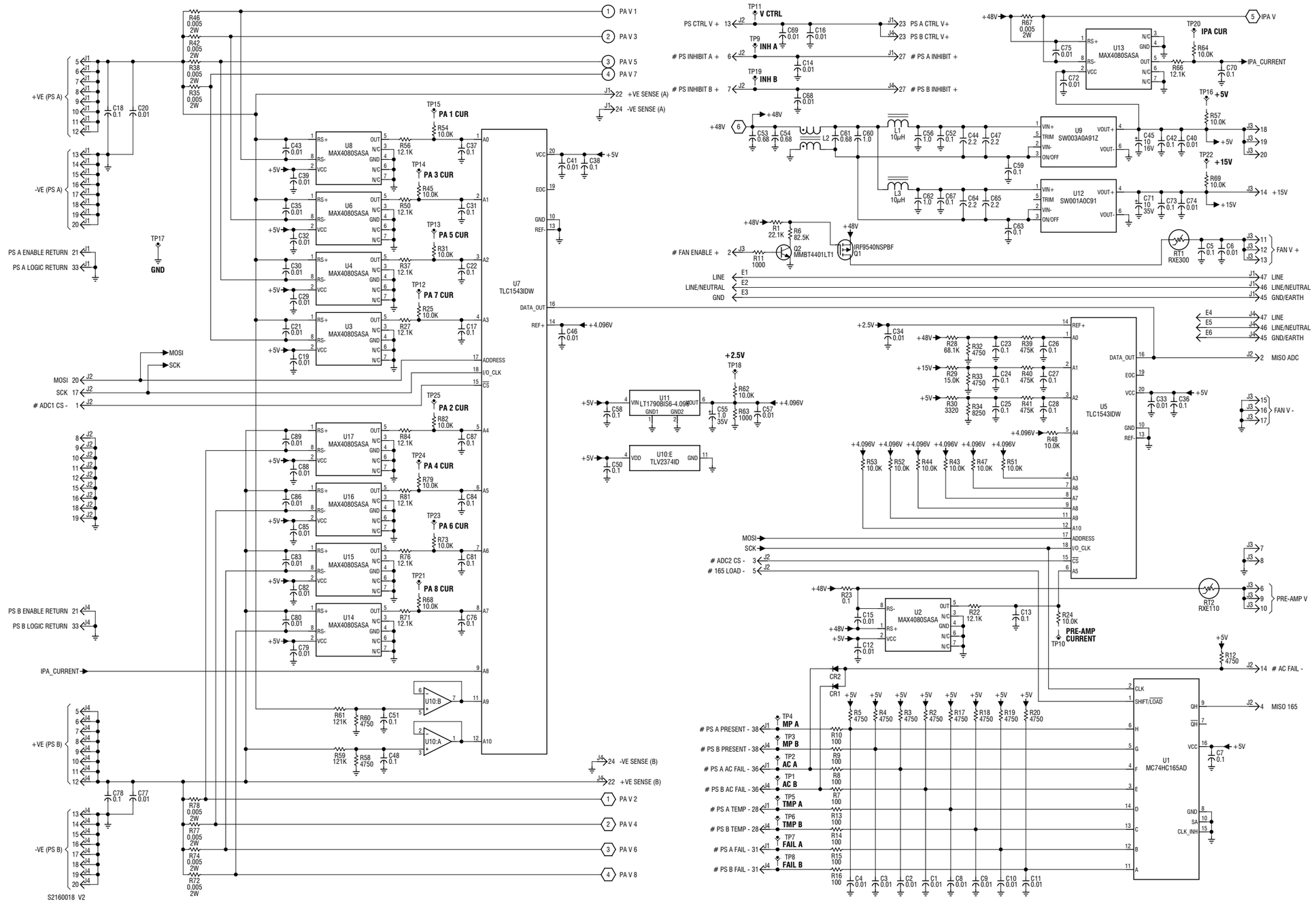

Figure SD-14: NAPI124 PS Distribution PWB (Dual)

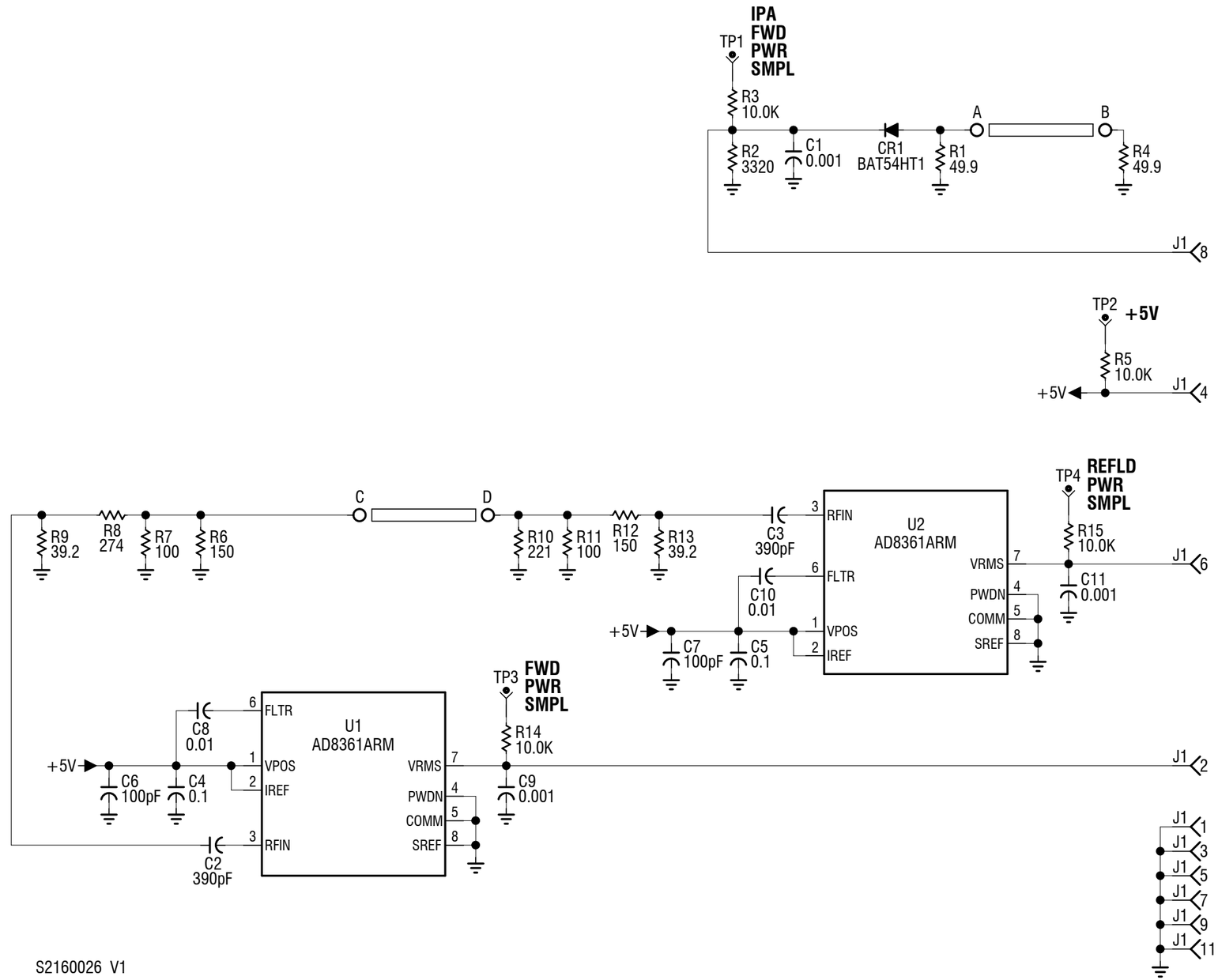

Figure SD-15: NAPI132 Combiner Interface PWB (1250 W)

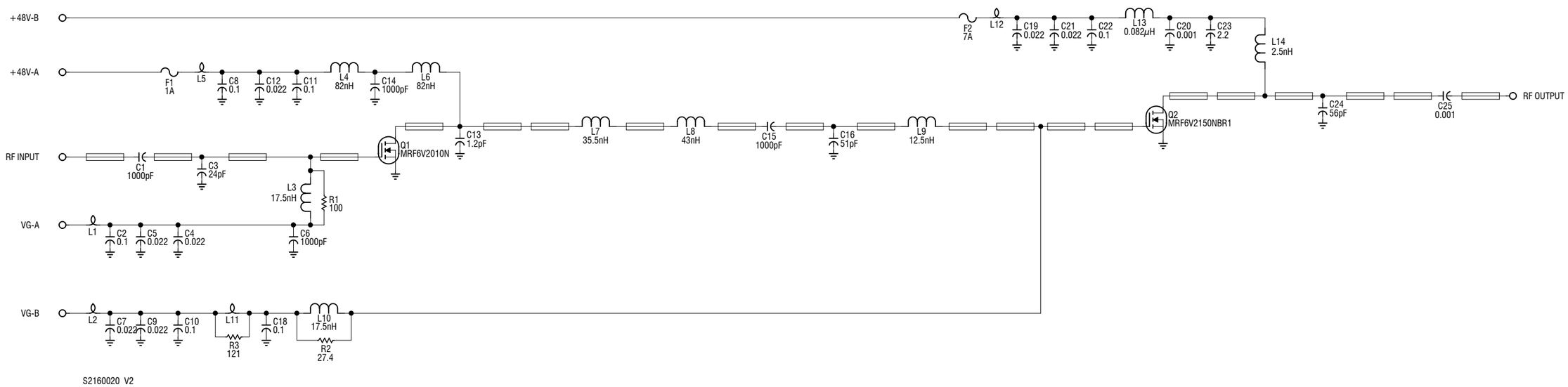

Figure SD-16: NAPA26 Pre-Amp/IPA PWB

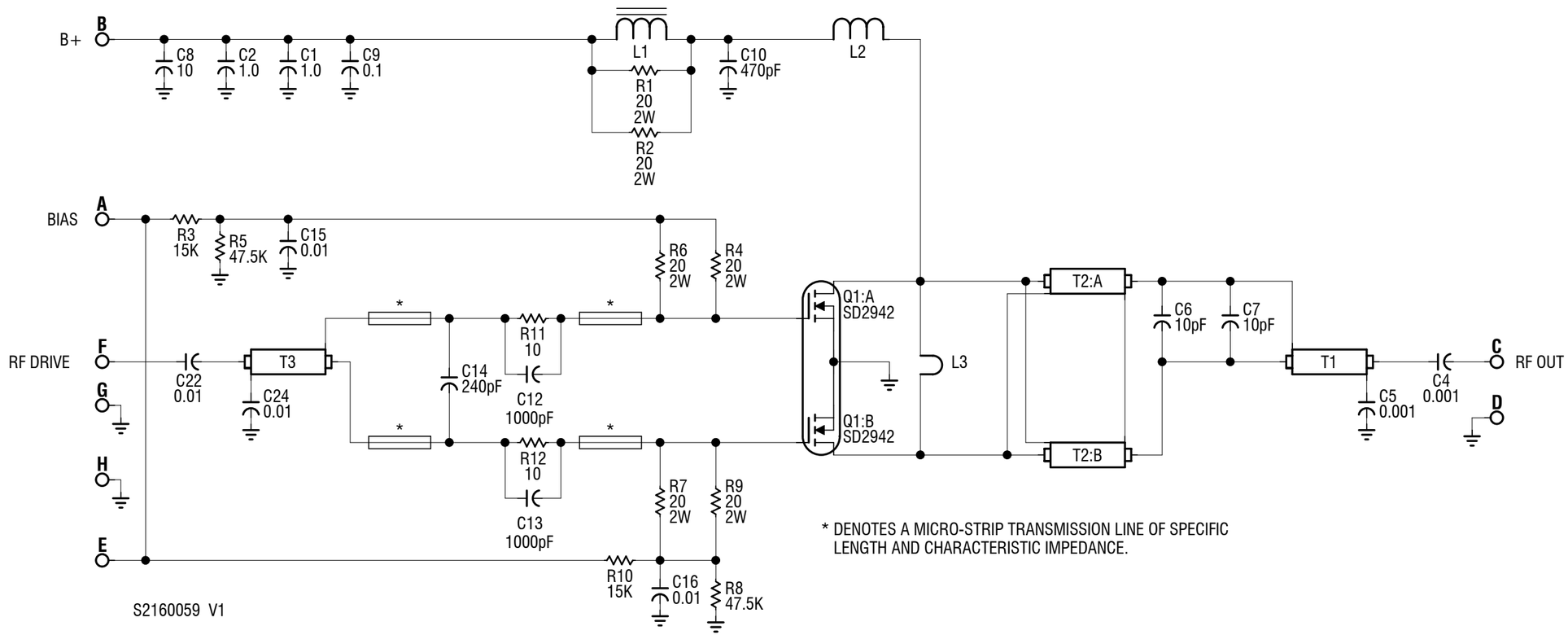

Figure SD-17: NAPA24 PA PWB

Section 5: Mechanical Drawings

This section contains mechanical drawings for assemblies of the transmitter. Dimensional drawings may be included. Refer to Table 5.1 on page 5-2 for an itemized list.

Assembly detail drawings for assemblies and modules that have separate manuals are not included. Refer to the appropriate maintenance manual for the assembly detail of these assemblies.

Identifying mechanical drawings

Each mechanical drawing in this section is identified by a number that is both the figure number and the page number. The numbers are assigned sequentially and are prefixed by the letters MD. Drawings in this section are listed in Table 5.1 on page 5-2.

Content of mechanical drawings

Mechanical drawings are illustrations that depict the location of electrical components and show assembly outline detail. Dimensional information is included, where appropriate.

When a module or assembly is the subject of its own assembly detail drawing, and it is also shown in a higher level assembly, the detail depicted in the higher level assembly may have minor differences from the module or assembly actually installed. In this case, always refer to the assembly detail drawing of the module or assembly for detailed information.

Locating a part or assembly on a mechanical drawing

1. When a part or assembly is assigned a reference designation (e.g., A2A1 or A2A1R1), refer to the family trees in Section 3, "Parts Lists" on page 3-1. Follow the family tree branches to the block that contains the desired reference designation and Nautel nomenclature (e.g., NAPC157 System Controller PWB). Note the reference designations and Nautel nomenclatures of all higher assemblies in the path.
   Example: A1 NAX251 System Controller > A1A1 NAPC157 System Controller PWB.

2. Refer to Table 5.1 on page 5-2. Use the reference designation and Nautel nomenclature to identify the appropriate mechanical drawing.
   Example: NAPC157 System Controller PWB is shown on schematics MD-3.

3. If necessary, refer to the referenced figure (e.g., MD-3) in the mechanical drawings at the end of this section and locate the next, lower-level assembly. Then, repeat this procedure until the desired part or assembly is found.

Table 5.1: List of Mechanical Drawings

Figure #	Title
MD-1	NG1000 Weather Radio Transmitter System
MD-2	NAX251 System Controller
MD-3	NAPC157 System Controller PWB
MD-4	NAPX39 Button/LED PWB
MD-5	NARF62 VHF Transmitter, 1250 W
MD-6	NAPE82 Exciter/Control PWB
MD-7	NAPI124 PS Distribution PWB (Dual)
MD-8	NAPI127 Splitter PWB (1250 W)
MD-9	NAPX41 Combiner. LPF, Probe PWB (1250 W)
MD-10	NAPI132 Combiner Interface PWB (1250 W)
MD-11	NAPX40 LED PWB
MD-12	NAPA26 Pre-Amp/IPA PWB
MD-13	NAPA24 PA PWB
MD-14	Ac Distribution Assembly (216-7020)

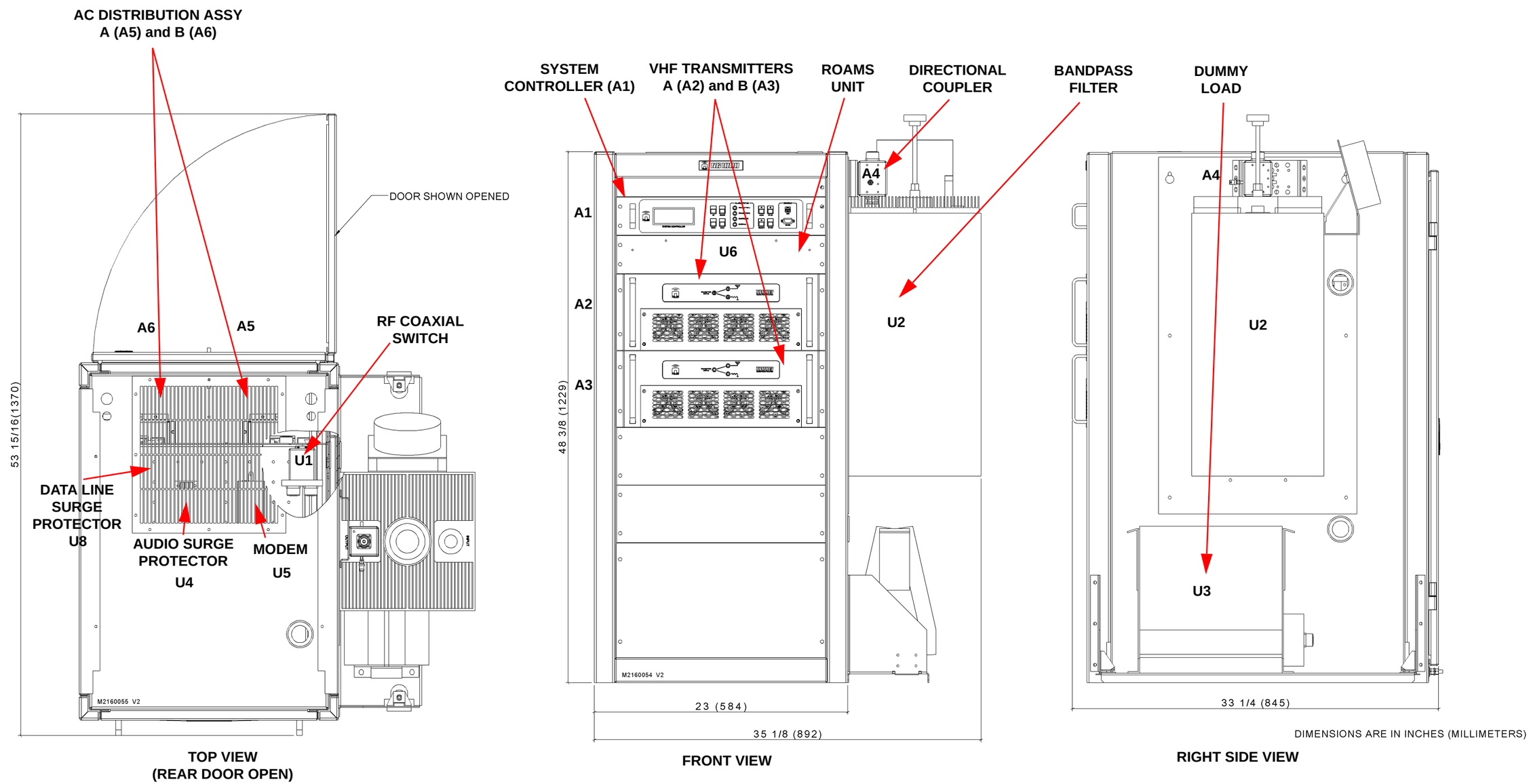

Figure MD-1: NG1000 Weather Radio Transmitter System

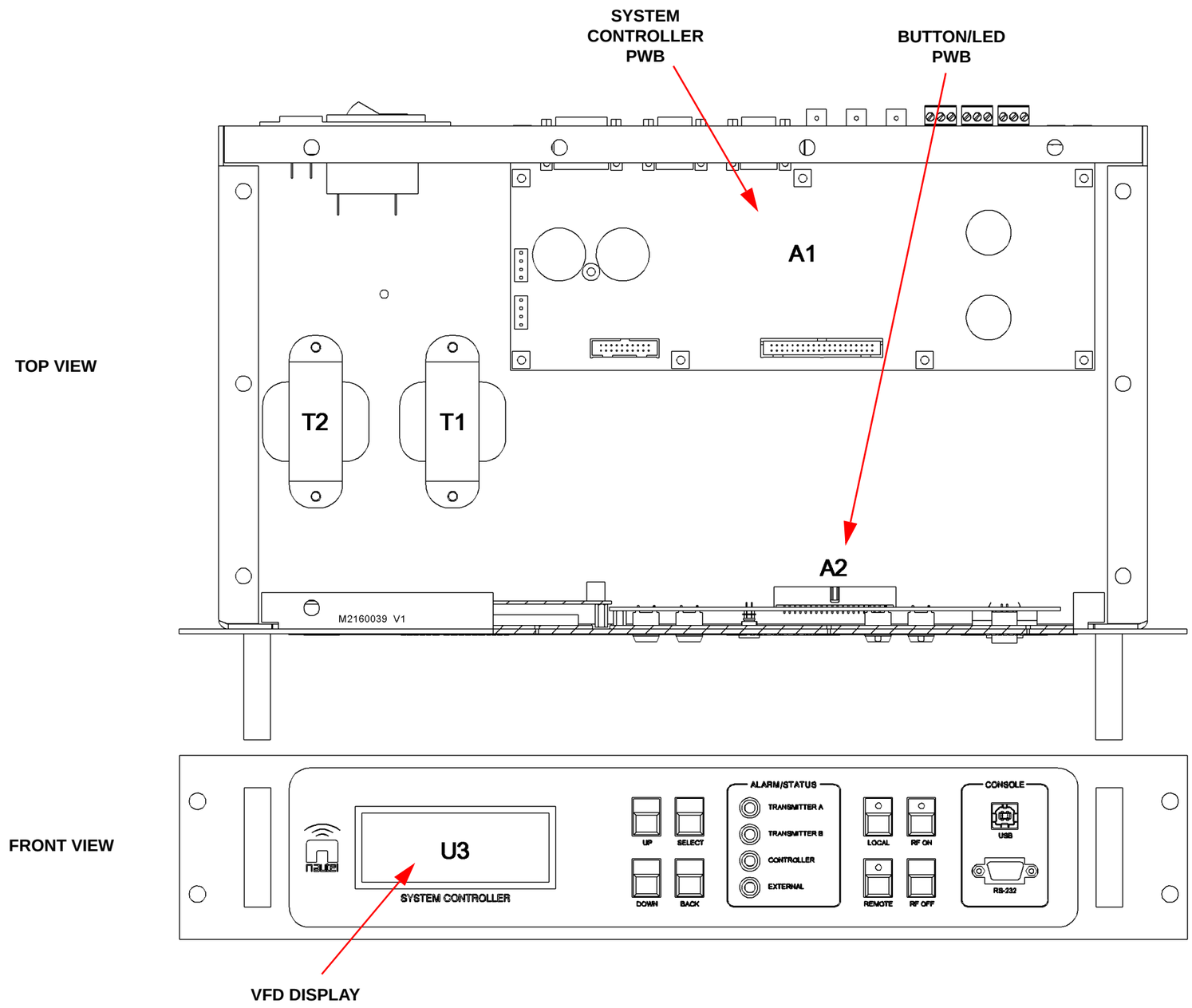

Figure MD-2: NAX251 System Controller

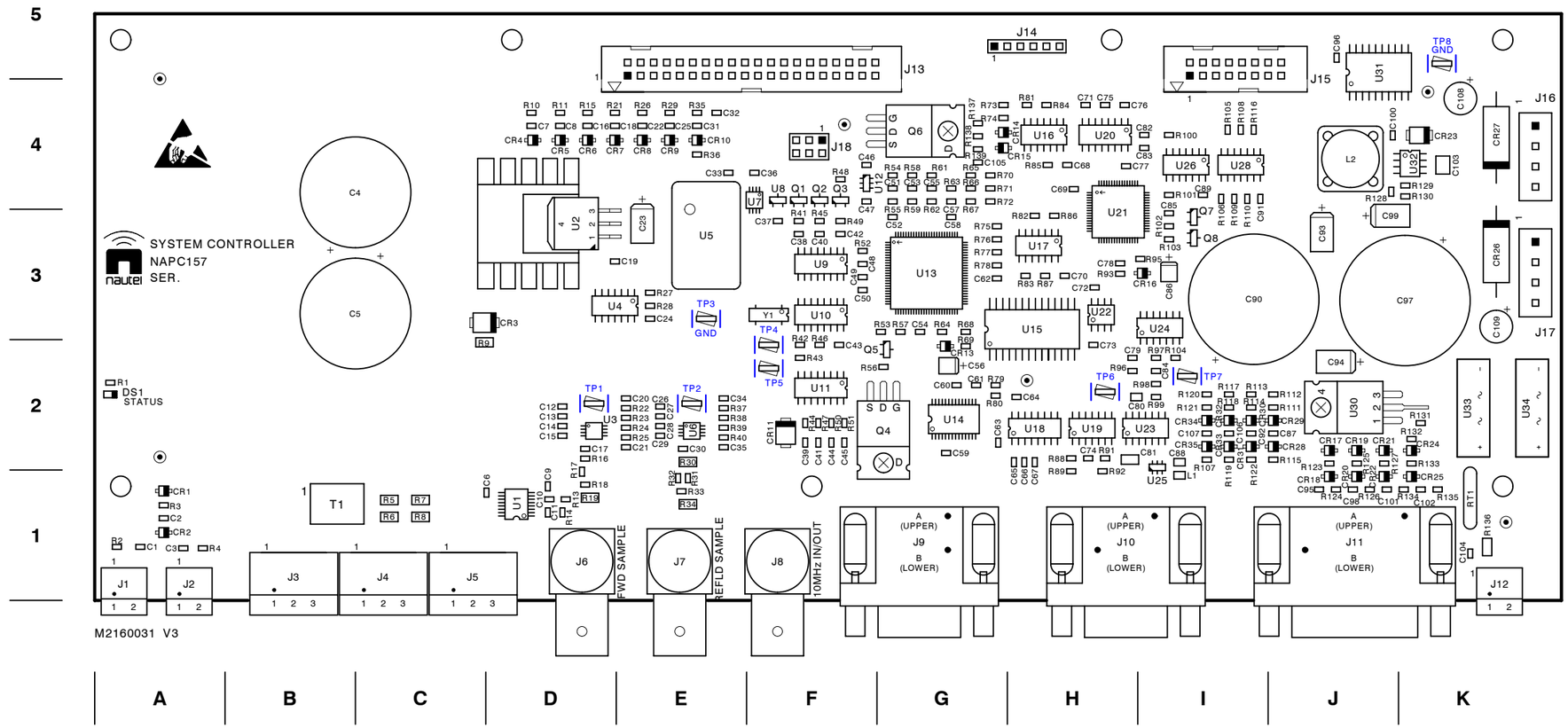

Figure MD-3: NAPC157 System Controller PWB

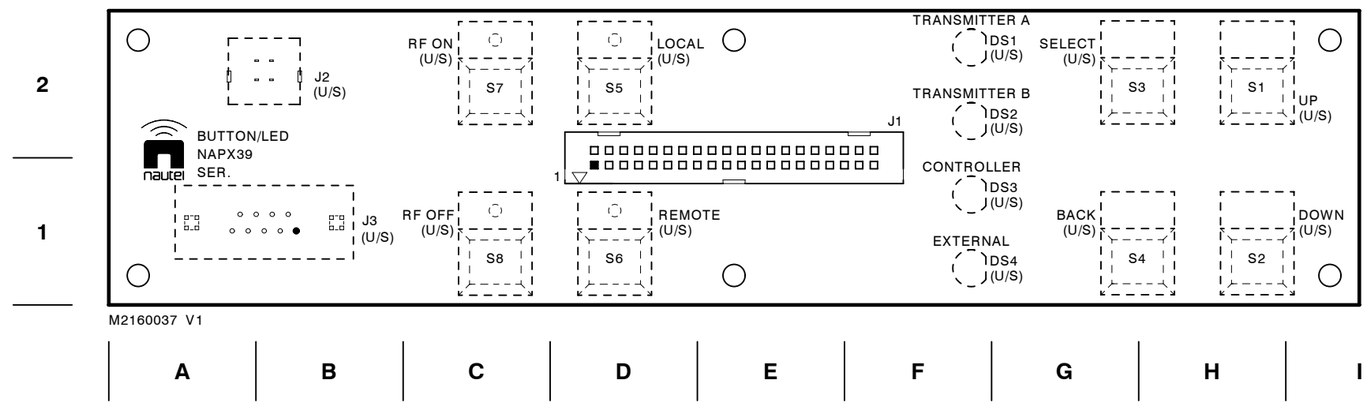

Figure MD-4: NAPX39 Button/LED PWB

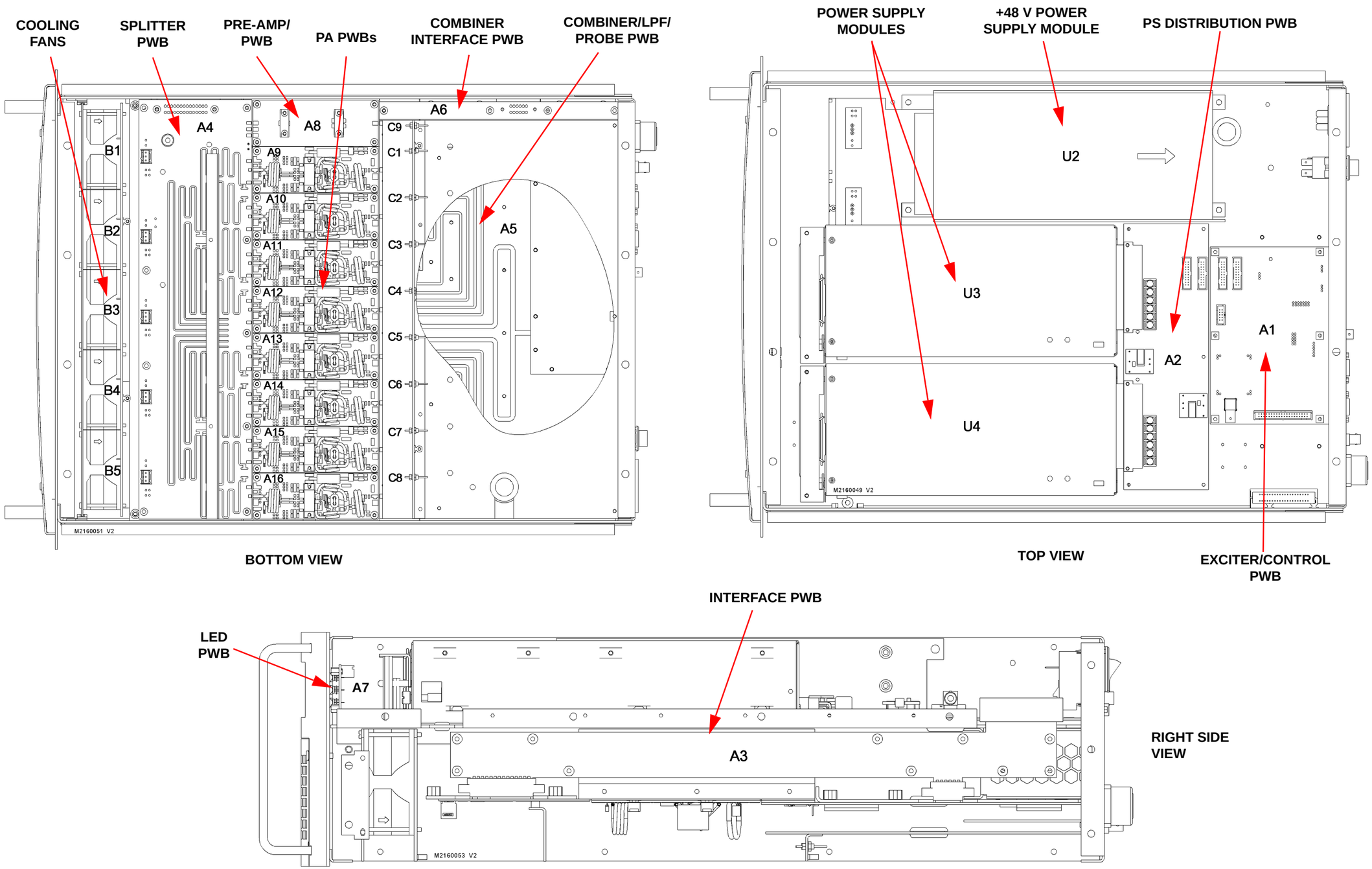

Figure MD-5: NARF62 VHF Transmitter, 1250 W

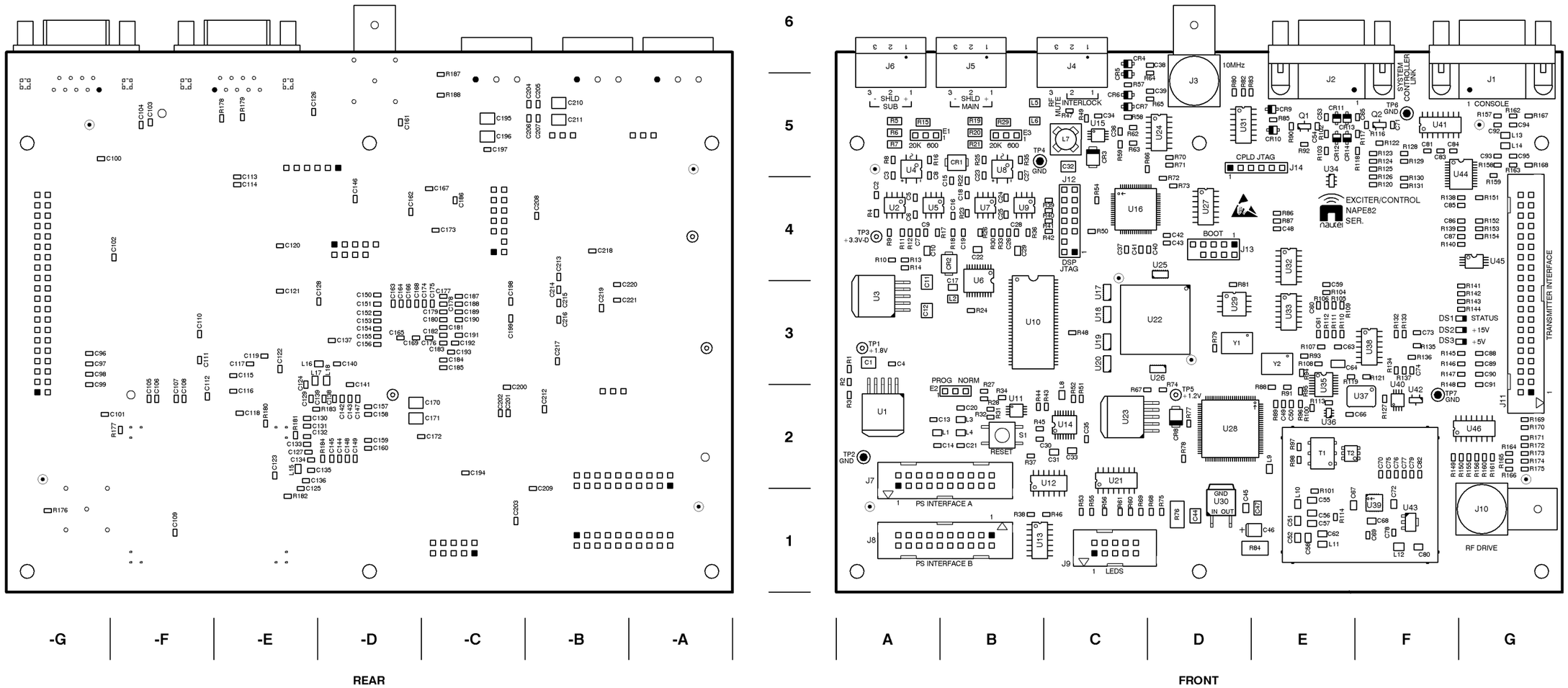

Figure MD-6: NAPE82 Exciter/Control PWB

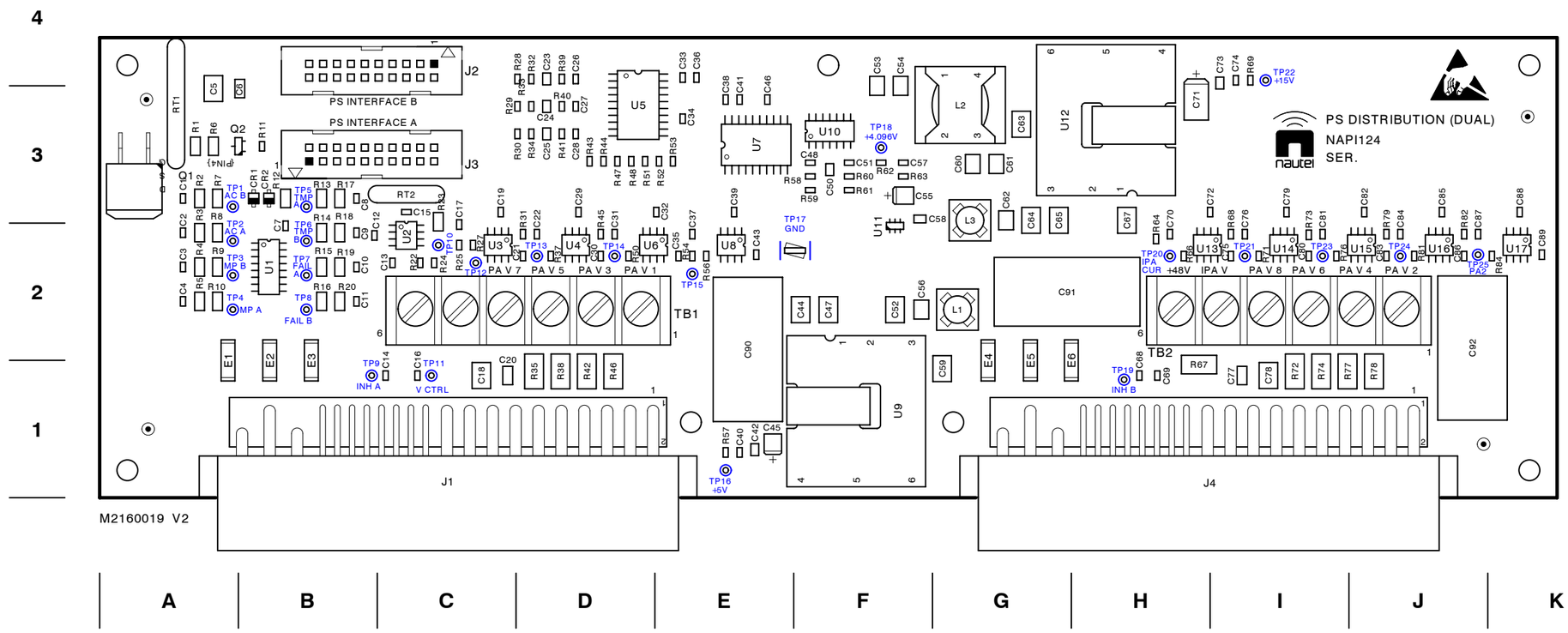

Figure MD-7: NAPI124 PS Distribution PWB (Dual))

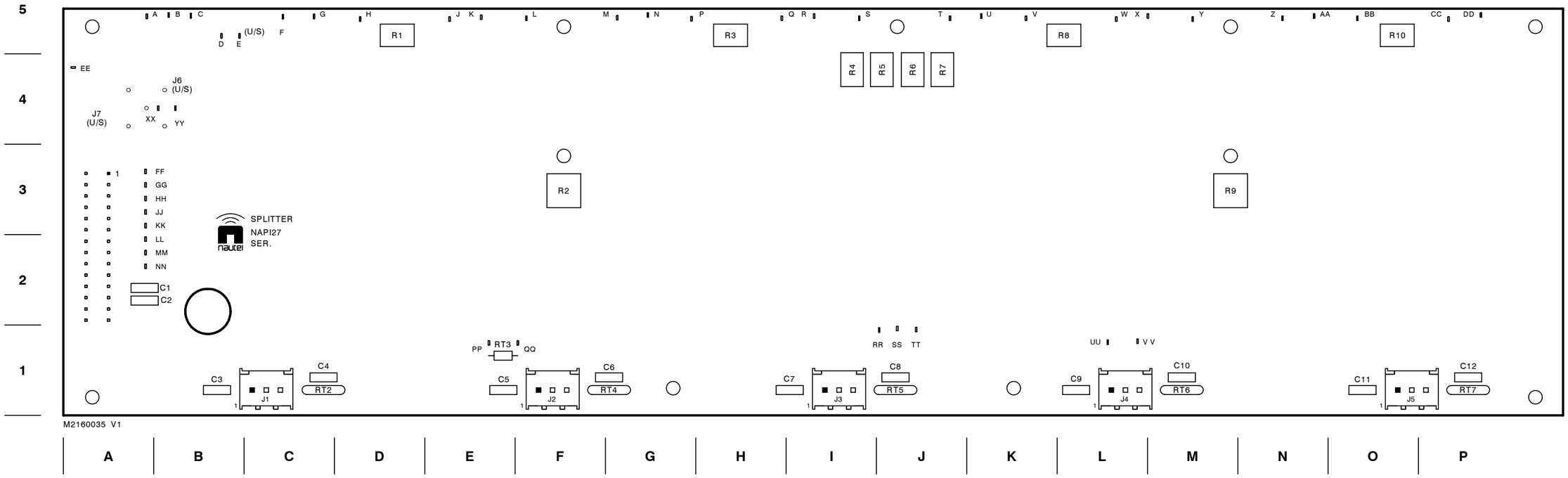

Figure MD-8: NAPI127 Splitter PWB (1250 W)

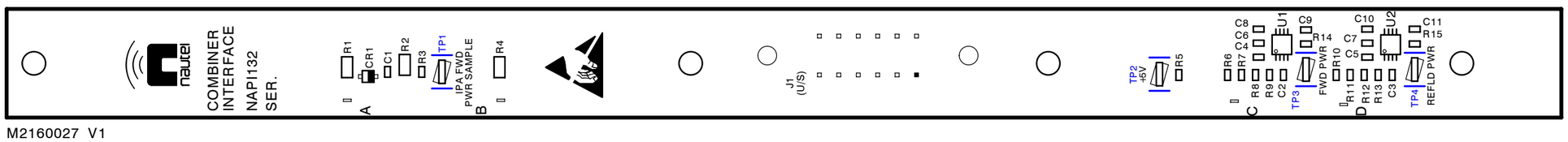

Figure MD-9: NAPI132 Combiner Interface PWB (1250 W)

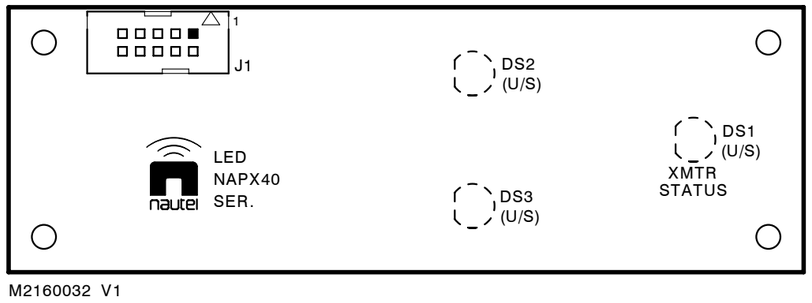

Figure MD-10: NAPX40 LED PWB

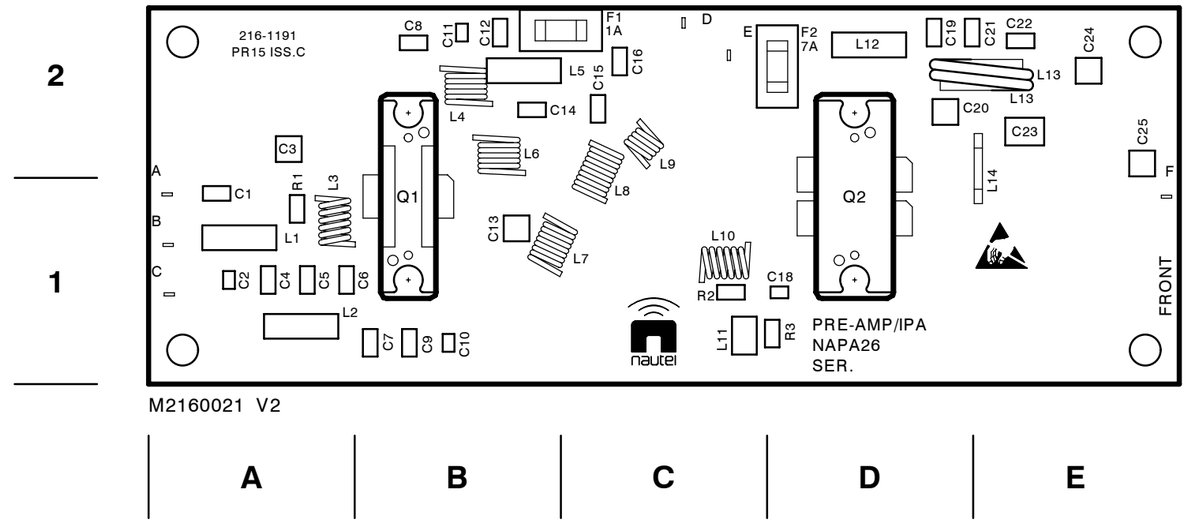

Figure MD-11: NAPA26 Pre-Amp/IPA PWB

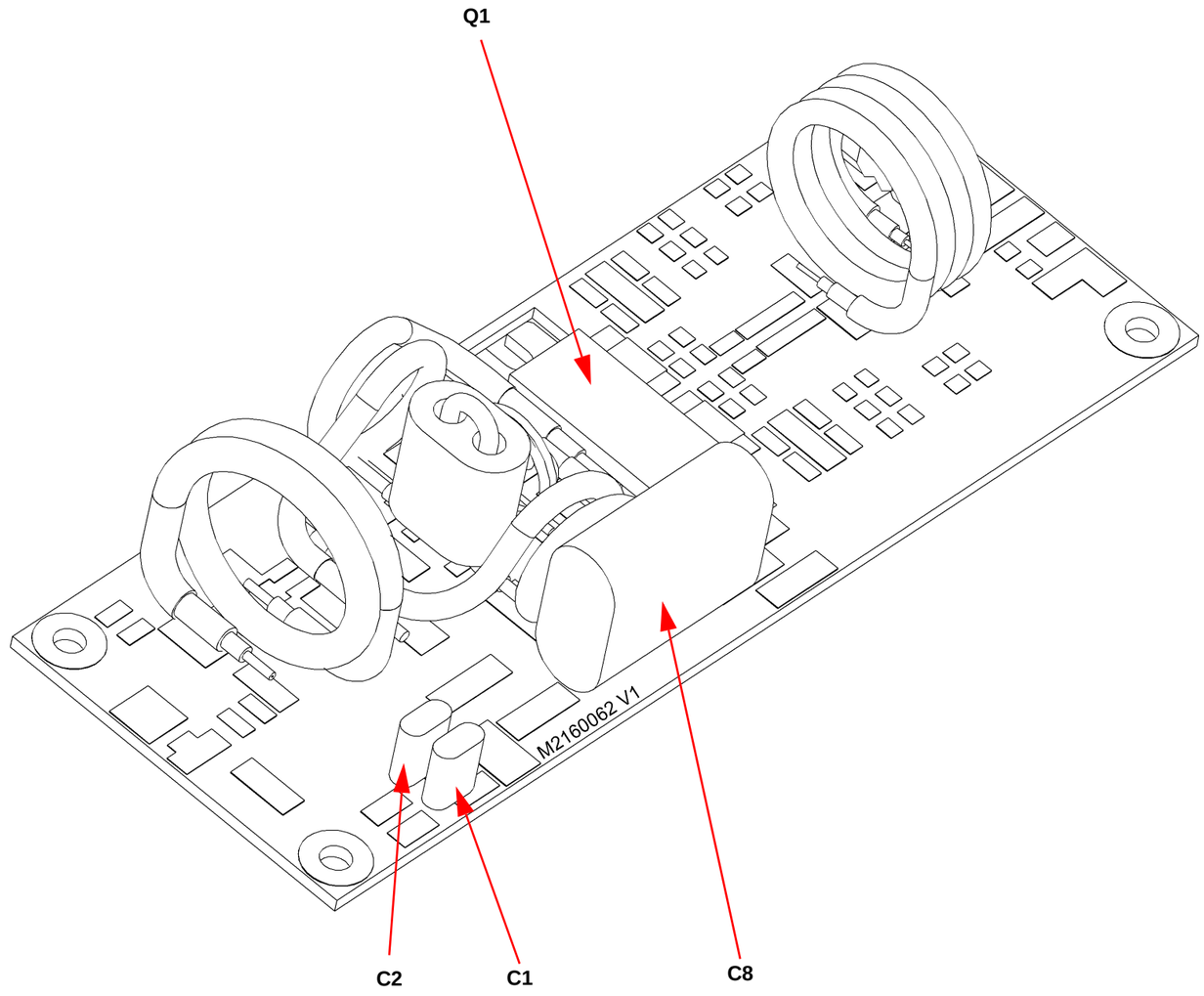

Figure MD-12: NAPA24 PA PWB

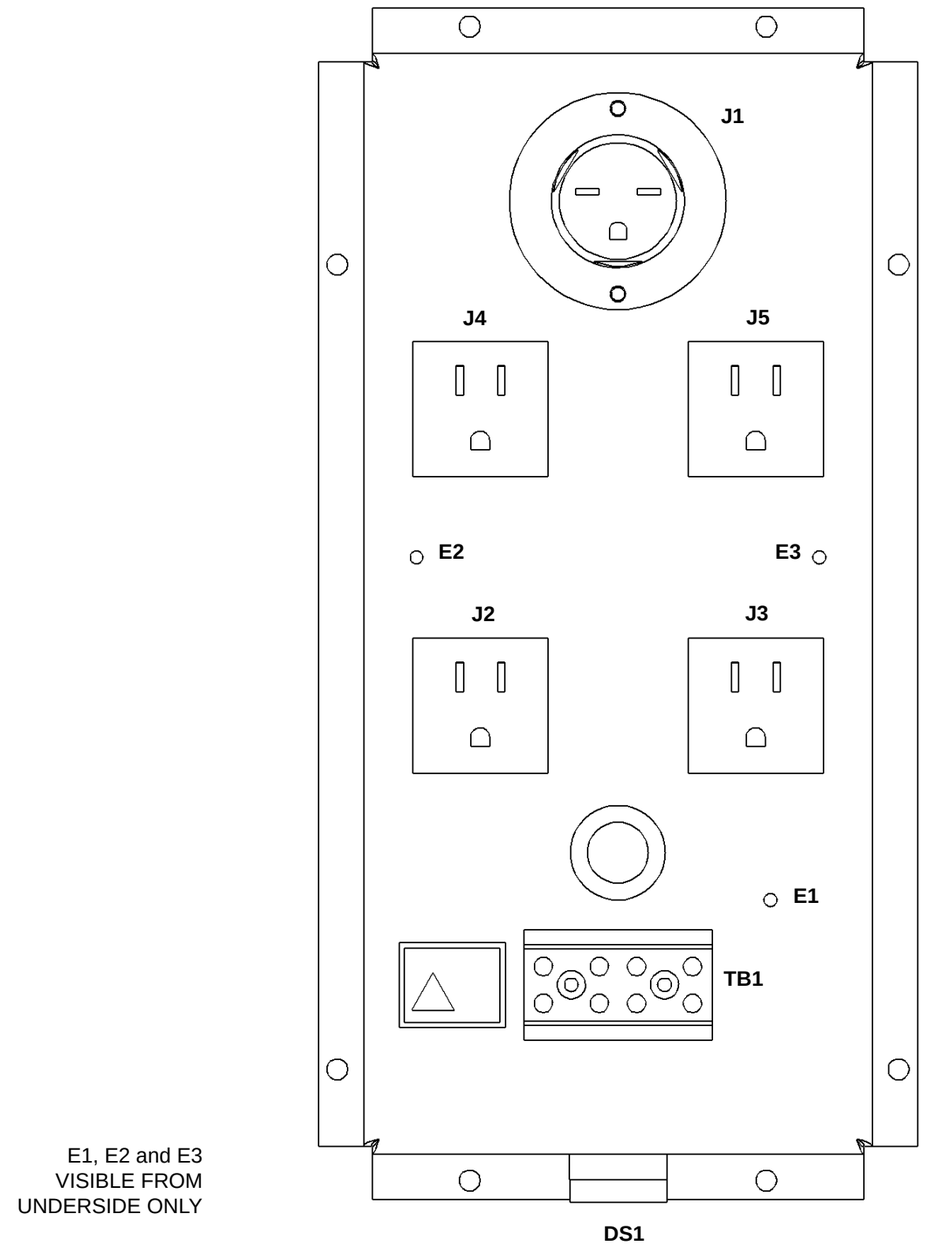

Figure MD-13: Ac Distribution Assembly (216-7020)

Section 6: List of terms

This section defines some of the terms that are used in Nautel documentation.

Cutback. A reduction in RF output power, caused by the occurrence of multiple shutbacks within a pre-defined period.

DSP. Digital Signal Processing.

EEPROM. Electrically Erasable Programmable Read-Only Memory.

Foldback. A reduction in RF output power, caused by adverse load conditions (high VSWR). No shutbacks or cutbacks have occurred.

Intermediate Power Amplifier (IPA). Refers to circuitry within the transmitter's RF power modules which amplifies the exciter's RF output to a level sufficient to drive the final RF amplifiers.

LED. Light Emitting Diode (also referred to as lamp).

PWB. Printed Wiring Board.

Shutback. A complete, but temporary loss of RF output power, caused by any one of a variety of faults, including high VSWR, high reject load power, RF drive failure, or an open external interlock.

Shutdown. A complete and permanent loss of RF output power. Typically follows repeated cutback, foldback or shutback events.

Surge protection panel. An electrical panel that protects equipment from electrical surges in the ac power supply, antenna or site ground caused by lightning strikes.

UI. The User Interface is the front panel display on the system controller that allows for extensive control and monitoring of the transmitter system.

VFD. Vacuum Fluorescent Display.

VSWR. Voltage standing wave ratio. This is an expression of the ratio of forward voltage to reverse voltage on the feedline and antenna system. An ideal VSWR of 1:1 provides maximum transmitter-antenna efficiency.

NG1000

Troubleshooting Manual

Document: NG1000-TROUBLESHOOT

Issue: 0.3 2010-06-11

Nautel Limited
10089 Peggy's Cove Road
Hackett's Cove, NS Canada B3Z 3J4
Phone: +1.902.823.3900 or
Toll Free: +1.877.6NAUTEL (6628835) (Canada & USA only)
Fax: +1.902.823.3183

Nautel Inc.
201 Target Industrial Circle
Bangor, Maine USA 04401
Phone: +1.207.947.8200
Fax: +1.207.947.3693

Customer Service (24 hour support)
+1.877.628.8353 (Canada & USA only)
+1.902.823.5100 (International)

Email: support@nautel.com
Web: www.nautel.com

© Copyright 2010 NAUTEL. All rights reserved.